SHIP STRUCTURE COMMITTEE

The SHIP STRUCTURE COMMITTEE is constituted to prosecute a research program to improve the hull structures of ships and other marine structures by an extension of knowledge pertaining to design, materials and methods of construction.

RADM H. H. BELL (Chairman)
Chief, Office of Merchant Marine Safety
U.S. Coast Guard

Mr. P. M. PALERMO
Deputy Director, Hull Group
Naval Sea Systems Command

Mr. W. M. HANNAH
Vice President
American Bureau of Shipping

Mr. J. GROSS
Deputy Assistant Administrator for Commercial Development
Maritime Administration

Mr. P. McDONALD
Chief, Branch of Offshore Field Operations
U.S. Geological Survey

Mr. C. J. WHITESTONE
Engineer Officer
Military Sealift Command

CDR T. H. ROBINSON, U.S. Coast Guard (Secretary)

SHIP STRUCTURE SUBCOMMITTEE

The SHIP STRUCTURE SUBCOMMITTEE acts for the Ship Structure Committee on technical matters by providing technical coordination for the determination of goals and objectives of the program, and by evaluating and interpreting the results in terms of structural design, construction and operation.

U.S. COAST GUARD

CAPT R. L. BROWN
CDR J. C. CARD
CDR J. A. SANIAL, JR.
CDR W. M. SIMPSON, JR.

NAVAL SEA SYSTEMS COMMAND

Mr. R. H. CHIU
Mr. J. H. O'BRIEN
Mr. W. C. SANDBERG
Mr. R. P. SWANN
LCDR D. W. WHIDDON

U.S. GEOLOGICAL SURVEY

Mr. R. J. GIANGERELLI
Mr. J. B. GREGORY

NATIONAL ACADEMY OF SCIENCES SHIP RESEARCH COMMITTEE

Mr. A. D. HAFF - Liaison
Mr. R. W. RUMKE - Liaison

THE SOCIETY OF NAVAL ARCHITECTS & MARINE ENGINEERS

Mr. N. O. HAMMER - Liaison

WELDING RESEARCH COUNCIL

Mr. K. H. KOOPMAN - Liaison

U. S. MERCHANT MARINE ACADEMY

Dr. C.-B. KIM - Liaison

MILITARY SEALIFT COMMAND

Mr. G. ASHE
Mr. T. W. CHAPMAN
Mr. A. B. STAVOVY
Mr. D. STEIN

AMERICAN BUREAU OF SHIPPING

Dr. D. LIU
Mr. I. L. STERN

MARITIME ADMINISTRATION

Mr. N. O. HAMMER
Dr. W. M. MACLEAN
Mr. F. SKIBOLD
Mr. M. V. TOUMA

INTERNATIONAL SHIP STRUCTURES CONGRESS

Mr. S. G. STIANSEN - Liaison

AMERICAN IRON & STEEL INSTITUTE

Mr. R. H. STERNE - Liaison

STATE UNIVERSITY OF NEW YORK MARITIME COLLEGE

Dr. W. R. PORTER - Liaison

U.S. COAST GUARD ACADEMY

LCDR R. G. VORTHMAN - Liaison

U.S. NAVAL ACADEMY

Dr. R. BHATTACHARYYA - Liaison

BEST DOCUMENT AVAILABLE

Member Agencies:

United States Coast Guard
Naval Sea Systems Command
Military Sealift Command
Maritime Administration
United States Geological Survey
American Bureau of Shipping

Ship Structure Committee

An Interagency Advisory Committee
Dedicated to Improving the Structure of Ships

Address Correspondence to:

Secretary, Ship Structure Committee
U.S. Coast Guard Headquarters,(G-M/TP 13)
Washington, D.C. 20593

SR-1274

March 1981

With the rapid advances in computer technology, use of computer-aided preliminary design methods is increasing. Recognizing the need for an assessment of available technology, the Ship Structure Committee undertook a project to evaluate the current trends in computer-aided structural design systems and their impact on the preliminary structural design of ships. The survey and evaluation covered marine software systems as well as those used in the aircraft industry and civil engineering structures.

This report presents the results of the study. An assessment of the potential technical and economic benefits that might accrue from using a computer-aided design system is made. A recommendation for the development of an "ideal" software system with its various components is described in detail. An extensive list of existing programs is included in an appendix.

Henry H. Bell
Rear Admiral, U.S. Coast Guard
Chairman, Ship Structure Committee

BEST DOCUMENT AVAILABLE

Technical Report Documentation Page

1. Report No. SSC-302	2. Government Accession N	3. Recipient's Catalog No.
4. Title and Subtitle COMPUTER-AIDED PRELIMINARY SHIP STRUCTURAL DESIGN		5. Report Date FEBRUARY, 1981
		6. Performing Organization Code
7. Author(s) A. E. Mansour and A. Thayamballi		8. Performing Organization Report No. SR-1274
9. Performing Organization Name and Address Mansour Engineering Inc. Berkeley, CA 94704		10 Work Unit No. (TRAIS)
		11. Contract or Grant No. DOT-CG-919802-A
12. Sponsoring Agency Name and Address U.S. Coast Guard Office of Merchant Marine Safety Washington, D.C. 20593		13. Type of Report and Period Covered FINAL
		14. Sponsoring Agency Code G-M

15. Supplementary Notes

Ship Structure Committee Report SR-1274

16. Abstract

Undoubtedly, ship structural design and analysis is an area that is receiving some benefits from the rapid advances of computer technology. In this report, an evaluation is made of the current trends in computer-aided structural design systems and their possible impact on the preliminary structural design of ships. The survey and evaluation covers marine software systems as well as non-marine systems such as those used in the aerospace industry and civil engineering structures. The elements of an "ideal" program suitable for the preliminary structural design of ships are identified and used in the evaluation of available software. Suitable programs are then selected for the various typical aspects of ship preliminary structural design. An assessment of the potential technical and economic benefits that might accrue from using a computer-aided design system is made. A recommendation is also made for the development of a software system with its various components described in detail. An extensive list of existing programs is appended to this report.

17. Key Words Structural design Preliminary design Computer-aided design Integrated design system Software engineering	18. Distribution Statement Document is available to the U.S. Public through the National Technical Information Service, Springfield, VA 22161

19. Security Classif. (of this report)	20. Security Classif. (of this page)	21. No. of Pages	22. Price
UNCLASSIFIED	UNCLASSIFIED	126	

Form DOT F 1700.7 (8-72) Reproduction of completed page authorized

-[redacted]-

IV

BEST DOCUMENT AVAILABLE

METRIC CONVERSION FACTORS

Approximate Conversions to Metric Measures

Symbol	When You Know	Multiply by	To Find	Symbol
		LENGTH		
in	inches	*2.5	centimeters	cm
ft	feet	30	centimeters	cm
yd	yards	0.9	meters	m
mi	miles	1.6	kilometers	km
		AREA		
in^2	square inches	6.5	square centimeters	cm^2
ft^2	square feet	0.09	square meters	m^2
yd^2	square yards	0.8	square meters	m^2
mi^2	square miles	2.6	square kilometers	km^2
	acres	0.4	hectares	ha
		MASS (weight)		
oz	ounces	28	grams	g
lb	pounds	0.45	kilograms	kg
	short tons (2000 lb)	0.9	tonnes	t
		VOLUME		
tsp	teaspoons	5	milliliters	ml
Tbsp	tablespoons	15	milliliters	ml
fl oz	fluid ounces	30	milliliters	ml
c	cups	0.24	liters	l
pt	pints	0.47	liters	l
qt	quarts	0.95	liters	l
gal	gallons	3.8	liters	l
ft^3	cubic feet	0.03	cubic meters	m^3
yd^3	cubic yards	0.76	cubic meters	m^3
		TEMPERATURE (exact)		
°F	Fahrenheit temperature	5/9 (after subtracting 32)	Celsius temperature	°C

*1 in = 2.54 (exactly). For other exact conversions and more detailed tables, see NBS Misc. Publ. 286, Units of Weights and Measures, Price $2.25, SD Catalog No. C13.10:286.

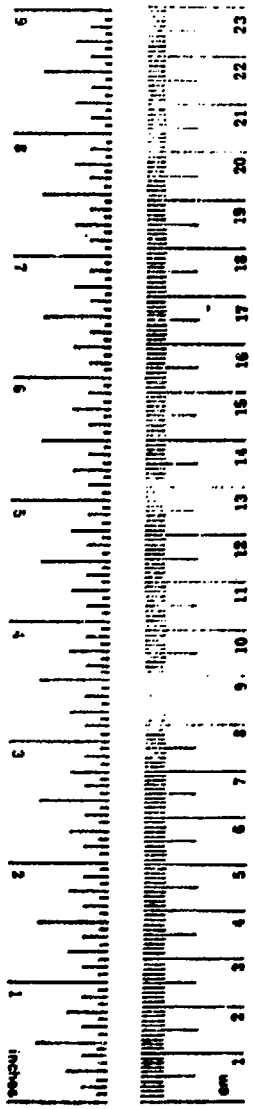

Approximate Conversions from Metric Measures

Symbol	When You Know	Multiply by	To Find	Symbol
		LENGTH		
mm	millimeters	0.04	inches	in
cm	centimeters	0.4	inches	in
m	meters	3.3	feet	ft
m	meters	1.1	yards	yd
km	kilometers	0.6	miles	mi
		AREA		
cm^2	square centimeters	0.16	square inches	in^2
m^2	square meters	1.2	square yards	yd^2
km^2	square kilometers	0.4	square miles	mi^2
ha	hectares (10,000 m^2)	2.5	acres	
		MASS (weight)		
g	grams	0.035	ounces	oz
kg	kilograms	2.2	pounds	lb
t	tonnes (1000 kg)	1.1	short tons	
		VOLUME		
ml	milliliters	0.03	fluid ounces	fl oz
l	liters	2.1	pints	pt
l	liters	1.06	quarts	qt
l	liters	0.26	gallons	gal
m^3	cubic meters	35	cubic feet	ft^3
m^3	cubic meters	1.3	cubic yards	yd^3
		TEMPERATURE (exact)		
°C	Celsius temperature	9/5 (then add 32)	Fahrenheit temperature	°F

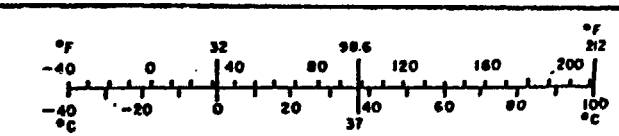

V

BEST DOCUMENT AVAILABLE

TABLE OF CONTENTS

		Page
I.	INTRODUCTION AND SUMMARY	1
	A. BACKGROUND	1
	B. SCOPE AND OBJECTIVE OF THE PROJECT	2
	C. APPROACH	2
	D. OUTLINE OF REPORT	4
II.	PRESENT TRENDS IN COMPUTER-AIDED STRUCTURAL DESIGN	5
	A. STRUCTURAL ANALYSIS, THEORY AND PRACTICE	5
	B. STRUCTURAL OPTIMIZATION	6
	C. COMPUTER TECHNOLOGY WITH EMPHASIS ON THE MINICOMPUTER	7
	D. INTEGRATED DESIGN SYSTEMS	7
	E. DESIGN ENVIRONMENTS	8
	F. SOFTWARE RELATED TOPICS SUCH AS SOFTWARE ENGINEERING AND SOFTWARE COORDINATION	8
III.	A SURVEY OF COMPUTER APPLICATIONS TO STRUCTURAL DESIGN	9
	A. COMPUTER APPLICATIONS IN NAVAL ARCHITECTURE	10
	B. COMPUTER APPLICATIONS IN CIVIL ENGINEERING	31
	C. STRUCTURAL DESIGN AND ANALYSIS COMPUTER PROGRAMS IN THE AEROSPACE INDUSTRY	42
IV.	SELECTION AND ASSESSMENT OF PROGRAMS SUITABLE FOR USE IN A PRELIMINARY SHIP STRUCTURAL DESIGN SYSTEM	47
	A. FEATURES OF AN IDEAL COMPUTER-AIDED STRUCTURAL DESIGN SYSTEM	48
	B. ELEMENTS OF AN INTEGRATED DESIGN SYSTEM FOR PRELIMINARY SHIP STRUCTURAL DESIGN	55
V.	ASSESSMENT OF POTENTIAL BENEFITS AND CONCLUSIONS AND RECOMMENDATIONS	70
	A. ASSESSMENT OF POTENTIAL TECHNICAL AND ECONOMIC BENEFITS OF A COMPUTER-AIDED SHIP STRUCTURAL DESIGN SYSTEM	70
	B. SPECIFIC RESULTS OF THE SURVEY	72
	C. GENERAL CONCLUSIONS	73
	D. RECOMMENDATIONS	75
ACKNOWLEDGEMENT		76
REFERENCES		77
APPENDIX		98

I. INTRODUCTION AND SUMMARY

A. BACKGROUND

The application of computer technology to ship structural synthesis is an area with a high potential for improving design efficiency and reducing costs. Such applications of computers are being developed and used in most industrially advanced countries of the world. One of the reasons for such applications is that changes have often been required in the techniques and philosophy of structural design, especially with the advent and construction of new types of ships such as LNG carriers, RO/RO vessels, large oil tankers, and advanced marine vehicles.

Hull structural analysis and design has traditionally consisted of determining the response of a given ship to a design seaway and comparing the ensuing behavior with allowable criteria. Generally, the design process involves a number of successive iterations. Although it is conceivable that structural design can be made by the direct solution of a closed form equation, the difficulty associated with determining such an expression makes this prospect very unlikely in the near future. In this context, the computer may be seen to be an effective structural design tool using analytical techniques in a manner that allows rapid synthesis by iteration.

A well-developed computer-aided structural design system should provide the necessary tools for making trade-off studies quickly and easily in the early phases of ship design. It should also facilitate changes to be made in the baseline requirements, design criteria, geometrical constraints, and environmental conditions. Such a system should free the naval architect from the many laborious computation and data manipulation tasks and make it possible for him to review many more alternative structural designs in his search for the optimal design.

Thus, a computer-aided structural design system should blend the designer and the computer into a problem-solving team and allocate the design tasks between the designer and the computer according to their inherent capabilities and limitations. It would thus automate a large part of the design process. It would be able to accept, interpret, and remember shape descriptive information introduced graphically. When such input capability is properly designed, the man-computer combination can manipulate the graphical elements of the structural design with great freedom and precision, surpassing what was possible in the past.

The flexibility and ease of communications with the computer is an important element in a well-designed computer-aided structural design system. This would encourage the designer to use more detailed and more accurate mathematical models for the real physical system than he has been willing or able to use in the past. In turn, this may ensure a more rapid approach to an optimum design.

B. SCOPE AND OBJECTIVE OF THE PROJECT

It is in the context of investigating the extent of possible application of computers to the design of the ship hull girder that the Ship Structure Committee sponsored this work. The objective of the project was "to assess the state-of-the-art of computer technology in the field of preliminary structural design so that the design of ships may be optimized using the best available systems."

One of the aims of the project was to review and examine existing computer-aided procedures in both the marine and the non-marine areas that could possibly be used for the preliminary structural design of ships. The potential contributions of such a system to the efficiency and vitality of the design process as well as to reduced overall costs was also to be gauged. A suitable plan for future action in regard to computer-aided preliminary ship structural design was to be recommended.

It is pertinent at this point to state what we mean by "preliminary design" and why it is ever so important in the overall design process. Preliminary structural design is the development of a selected feasible design for the purpose of obtaining a balanced engineering solution to the structural problem at hand. It serves as a basis for contract design. Contract design consists of the preparation of contract drawings and specifications that are sufficient for the shipbuilder and the ship owner to negotiate or contract for building the ship. The present-day ship hull is a massive structure that, as regards to its size and cost, finds few competitors ashore. The cost of the hull structure is, in all cases, a very significant part of the total cost of the ship. A great potential for savings through careful design studies is thus present in the initial design stages. The designer should be able to study a number of different solutions at this stage in his quest for the optimal design, and usually within tight time schedules. The problem at hand is quite complex, with a large number of interactions between the various parts and aspects of the ship. Given all this, and given the time-consuming nature of the analytical methods, a very definite case may be made for the use of a comprehensive computer-aided system for the preliminary structural design of ships. The advantages that could accrue by doing this are stated elsewhere in this report.

C. APPROACH

In conducting the work, a survey and evaluation have been made of the existing developments in computer-aided structural design of ships and other marine structures in the United States, Western Europe, and Japan. In addition, an evaluation of current developments in computer-aided structural design in non-marine areas has been undertaken particularly in areas of aerospace vehicle design and civil engineering structures. Sources in the review have included ISSC proceedings, SSC reports, SNAME publications, AIAA journals, NASA publications, ASCE transactions, JSNA Japan, and many other sources in the open literature. Sources such as the Maritime Research Information Service and the National Technical Information Service were also used in the effort. Software coordination efforts such as NASA's COSMIC were also contacted, both here and abroad.

Individuals and organizations such as universities and classification societies that have developed or used pertinent computer programs were also contacted. The initial contact was usually through a general letter. Once the individuals and organizations that could be of further help were identified, they were approached in further detail through the use of a questionnaire. The questionnaire was aimed at providing greater in-depth information on the software in question. The questionnaire placed emphasis on three areas: the capabilities and limitations of the program, the user experience and reaction to it, and its software design aspects such as modularity, system dependence, etc. The responses were helpful in gauging the suitability of the software for use in a structural design system. The process of the literature survey and evaluation, together with direct contact, helped in selecting the programs that are listed in Chapter IV as being representative of the various aspects of the structural design of ships.

In the course of the general survey, an evaluation was made of the capabilities of the pertinent computer-aided structural design systems. An important aspect of this task was to examine and assess the difficulties in the adaption of the non-marine computer-aided structural design system to preliminary ship structural design. A distinction was made in the review between computer programs developed for the analysis of ships and other structures and those developed with preliminary structural design capabilities. A distinction was also made between computer-aided design and computer-aided manufacturing systems. Emphasis in the evaluation was directed towards systems suitable for preliminary ship structural design.

Evaluation and assessment have been made with respect to potential contributions and benefits to the maritime community involved in preliminary structural design from the application of computer-aided design systems. The potential benefits considered included aspects such as ease of making trade-off studies and of improving design for production, increase of consistency in design, the improvement in ship structural quality, reduction of time and cost in the preliminary design phases, possible material savings due to optimization of hull structure and possible higher structural reliability due to better material distribution.

Certain conclusions are drawn and limitations are given regarding the effect of increased use of computer-aided structural design systems in ships. The possible impact of such systems on the current design procedures are summarized. A plan of action which considers the goals, requirements, and functions of a computer-aided preliminary ship structural design system is then recommended. In the development of recommendations, the alternatives considered include the adaption of existing general structural design programs with little or no changes, the modification of existing systems to suit preliminary ship structural design requirements and the development of a new advanced computer-aided ship structural design system if none of the existing systems are adequate.

D. OUTLINE OF THE REPORT

Following this section, Chapter II presents an overview of the present trends in computer-aided structural design systems. The comments given therein are general in that they pertain to both marine and non-marine areas. This is followed, in Chapter III, by a survey of computer applications to structures in the marine, civil engineering (including bridges and buildings), and aerospace fields. The selection and assessment of software suitable for and typical of the various aspects of the preliminary structural design of ships is made in Chapter IV. The final chapter,V, includes an assessment of the potential technical and economic benefits that might accrue from using a computer-aided preliminary structural design system for ships. It also contains recommendations for future action in this regard. The rest of the report consists of an extensive bibliography and table (Appendix) listing the various computer programs surveyed.

II. PRESENT TRENDS IN COMPUTER-AIDED STRUCTURAL DESIGN

With the advent of the digital computer, structural analysis and design has seen the introduction and use of more rational and sophisticated methods than has been the case in the past. In this section, we present the current state and trends in computer-aided structural design. The discussion is rather general and encompasses both the marine and the non-marine fields. The trends discussed are in the following areas:

A. Structural Analysis, Theory and Practice

B. Structural Optimization

C. Computer Technology with Emphasis on the Minicomputer

D. Integrated Design Systems

E. Design Environments

F. Software-Related Topics Such as Software Engineering and Software Coordination

The material presented in this chapter have been derived from the general literature, from responses to questionnaires, and from the surveys made during this study of available computer software for structural engineering.

A. Structural Analysis, Theory and Practice

Regarding structural-analysis theory, the general consensus of opinion is with the view that linear-elastic analysis is well in hand, Ref. [1]. The main workhorse of the analysts is the displacement-based finite-element method which came into widespread use in part because of a certain conceptual simplicity. That it is at all possible to apply the method to complex structures with any reasonable degree of precision is due largely to the digital computer. There are a large number of these programs, with varying degrees of user involvement. The majority are used simply as a "black-box", a mode of thinking that contributes to proliferation of software. The alternative approach has been the use of finite-element programming systems. Such systems would give the user (1) a data-management module that is efficient for all types and amounts of data, (2) the processor modules including a hierarchy of matrix-manipulation tools that manipulate the data, and (3) a control language for sequencing of the processors. Given the modularity and the flexibility of the system, the user can put together an analysis package to suit the problem at hand.

A large amount of the total project time necessary for the analysis of complex structures by the finite-element method is spent in the preparation and verification of the input data, and in interpreting the voluminous output. A great deal of effort is evidently being spent in reducing this input-output time. The mesh generation is being automated. Computer-graphics hardware such as interactive terminals, digitizers, and plotters are being increasingly used in assisting with the preparation, editing, and reviewing of structural models. The use of such graphical devices to interpret the output will make the life of the analyst easier. It also gives him a unique insight and physical feel for the behavior of the structure and is thus a valuable tool, both in structural design and in teaching structural analysis, Ref. [2].

Advances in structural analysis theory may of course be expected in the coming years. We may see the unification of many of the different theories for the evaluation of structural behavior under a common umbrella. The user will be able to choose between the different approaches and put together a solution strategy suitable to the problem at hand. A unified approach of this form may involve a bank of techniques applicable say to both non-linear and linear finite-element analysis by the displacement method, with user-selected and controlled-convergence criteria. Any such advances would necessitate a program of continuing education for the analysts in order for them to effectively use the new tools and technology.

B. Structural Optimization

The use of optimization in structural design is gaining ground, Ref. [3]. This has never been an alien idea to the structural designer, in that his aim has always been to attain the best possible structure. The change now is in the development of better techniques well suited for the computer that ease the designer's task of evaluating alternate designs according to some chosen measure of merit. These new techniques typically involve (1) a capability for making directed parametric studies and (2) the use of an optimality criterion such as the fully stressed design or mathematical optimization methods.

Because of reasons of ease in application and intuitive satisfaction, the optimality-criteria-based approaches, principally the fully stressed design, have found many adherents. The use of mathematical programming techniques is not as widespread as the perceived merits of its use would warrant them to be. This is possibly because of a certain unfamiliarity with these methods and the vast numbers of them that would seem to suggest that a general consensus on the merits of the individual methods is lacking and that the subject is still undergoing considerable change, [1]. The methods are not, at the present level of theory or computers, suitable for very large problems. Part optimization of the smaller substructures is possible and desirable. The future will doubtless see increased use of structural optimization in general and mathematical programming in particular.

C. Computer Technology with Emphasis on the Minicomputer

The cost of computer hardware has seen a continuous decrease in the past, at a level of increased performance. This trend is likely to continue into the near future. Time-sharing systems and nets are making computational facilities available to an increasingly larger section of the design community. A good deal of effort is being spent to make such systems tolerable to the user in terms of the response time at his terminal.

The minicomputer has arrived and has proven to be a cost-effective answer to many aspects of structural design, Refs. [4,5]. These machines undoubtedly are slower for the compilation, loading, and execution of the program. For the other aspects such as interactive graphics usage, file management, or text editing, they can be comparable or better in terms of response times than a user-saturated time-sharing system on a large computer, Ref. [6].

The minicomputer has been used for ship's layout and for structural analysis, Ref. [7]. An interactive graphics, input preparation and output interpretation capability can be very effectively supported by such machines. Their main drawbacks are reduced computational speed and precision, and a limited core that can lead to size limitations on the problem that can be handled. The relatively smaller cost of these machines would lead us to think that software usable on a minicomputer would have a wider appeal.

In the future, we are sure to see faster and larger computers of the multi-processor and array processor variety. Whether or how they can be effectively taken advantage of for structural design needs further study.

D. Integrated Design Systems

Most advanced countries have seen efforts directed towards implementing integrated systems for various design processes and structural design is no exception. Integrated systems of programs that work off a common data base, with the data base and program management provided by an executive system, are commonplace now. These systems have been successful in industries and organizations that can afford the computer facilities that they generally need. Their impact in a small design office is yet to be felt. We may point out here that there seems to be an upper limit to the level of integration attainable in practice, Ref. [8]. This is possibly due to the time and cost involved in developing and maintaining such a system where one often sees an exponential increase in costs as the number of components increase. Assuring a flexibility in the system so that the demands of changing technology can be met is also a factor, considering that these systems take years to develop. When well planned and implemented, these systems doubtless have an effect on the design efficiency.

E. Design Environments

Design environments (Ref. [9]) that integrate the man and the machine better are coming into use. Typically, these provide facilities for a data base, and data and program management. Their emphasis is on providing for an easier interaction between the designer and the programs, rather than on trying to attain an automated integrated system. Some of them have the capability to define, interpret, and execute a problem-oriented command language. Some related aspects such as the development of data structures and the design and management of large and efficient data bases have, in the recent past, received a lot of attention among the computer scientists.

F. Software-Related Topics Such as Software Engineering and Software Coordination

Some effort has been spent in generating a debate among the engineering profession as regards to software design, Ref. [10]. The aim is to refine the current state of uncoordinated program development and proliferation through better software coordination, and to improve the quality, reliability, and utility of such software by increased use of software engineering.

A coordinated software-development and information-dissemination effort is necessary to avoid the proliferation of programs aimed at the same goal. The screening and enhancement of available software with a view to improving their utility would be part of such an effort, Ref. [11]. Software coordination in the United States is currently being performed by several non-centralized efforts, Refs. [10,12].

The need for greater use of software engineering in designing programs arises from the fact that the practical utility of such software can be greatly diminished by a lack of portability between machines and questionable reliability due to a lack of modularity and structured programming that make verification or correctness-proving ever so difficult. The relevant aspects of software engineering that the developer would pay attention to are the data structures and data-base management, modularity, reliability, expandability, portability, input/output, and the choice of the programming language, Ref. [10]. On the last point, the battle may well have already been lost. FORTRAN seems to be very well entrenched as the only logical choice for the structural design software due to its availability, standardization, and widespread use by the engineering community. This is so despite the fact that other programming languages exist that do not have some of the drawbacks of FORTRAN.

We now go on to survey computer applications to structural design, in both the marine and the non-marine areas.

III. A SURVEY OF COMPUTER APPLICATIONS TO STRUCTURAL DESIGN

This chapter is intended as an overview of our survey of available software for computer-aided structural design. The first section of this chapter (Item A: Computer Applications in Naval Architecture) deals with the marine area where, for completness and anticipated interest, we have included topics other than preliminary structural design. The second part (Item B: Computer Applications in Civil Engineering) is a survey of computer applications in land-based civil engineering structures such as buildings and bridges. The third section (Item C: Structural Design and Analysis Computer Programs in the Aerospace Industry) pertains to aerospace structures. Short descriptions of typical computer programs are given in each section. The reader is referred to the table in the Appendix for a more comprehensive list of the programs under each section.

A. COMPUTER APPLICATIONS IN NAVAL ARCHITECTURE

Computer applications in ship design and shipbuilding fall into several broad categories as follows (Ref. [13]):

1. Computer-Aided Ship Concept Design (Page 11)

   This includes the feasibility studies and the preliminary design of a ship. The end product consists of ship characteristics and related technical features.

2. Computer-Aided Hull Form Generation (Page 14)

   Automated procedures, including surface generation and lines fairing, used for the definition of the hull form fall into this category.

3. Detailed Design Calculations (Page 14)

   The ship hull is designed either to conform to classification society rules or from more basic principles by direct calculation of the hull scantlings. Detailed structural design calculations thus fall under this heading. A multitude of special-purpose programs and research efforts that invariably use the computer may also be categorized under this heading. The end product is the contract design and specifications for the hull.

4. Production-Related Applications (Page 28)

   These are aimed at translating the contract design into the actual hull. A more exact faired hull form is needed. This was traditionally done by conventional lofting. Structural detailing for manufacturing purposes is another application. Parts programming and nesting of structural parts for efficient material use may be followed by the generation of numerical-control information for automated production.

5. Information Systems in Shipbuilding (Page 30)

   These may include information systems to help in planning, scheduling, and material management. Data processing for administrative uses is another aspect of such systems.

Although we will survey some programs of all these types here, we are primarily interested in those concerned with structural design. An integrated structural design system would include a sea-loads pre-processor, a structural description capability, a structural-analysis capability, a device aimed at an optimal structure, and some defined structural-design criteria.

1. Computer-Aided Ship Concept Design

Ship concept design, which is the initial phase of the ship design process, involves the synthesis and analysis of various design alternatives in order to choose one that meets the operational and technical criteria best. Because of its nature, it is not possible with any definiteness to say what analysis may or may not constitute a part of concept design. The entire process may involve feasibility studies, trade-off and cost-effectiveness studies, ship concept exploration, and the preparation of a feasible design. The end product may then include the general arrangement and lines drawings, hydrostatics and stability particulars, the midship section, preliminary weight and centers of gravity estimates, and the speed-power curves.

Computer usage in concept design may be applied to synthesis of the feasible ship and the analysis of the performance of the ship or any of its subsystems. Programs for traditional ship design calculations such as those for calculating the hydrostatic particulars may be used in the course of the concept design process. Programs involving the use of mathematical optimization techniques for the choice of preliminary design characteristics of ships are another group of programs that are part of concept design. Yet, another set of programs pertain to the generation of the ship hull form once the principal characteristics have been determined. As an example of a good computer-aided concept design system, the ARL is briefly described below.

The ARL (UK) Forward Design System

A design system for the computer-aided design of warships using a minicomputer has been developed by the Admiralty Research Laboratory at Teddington in England (now part of the Admiralty Marine Technology Establishment), Ref. [14]. The system consists of a set of programs working off a common data base. The numerical description of the ship is held in the data base which is the main repository of information concerning the design at any stage of the process. The system consists of two categories of programs:

(a) Programs that permit designs to be set up and changed. These include routines for surface design using bicubic patches together with a grid technique, routines for the layout of the hull, superstructure decks and bulkheads, placement of weapons and machinery, and the control of ship configuration and size.

(b) Programs that calculate and record design characteristics, e.g., general ship drawing and plotting, analysis of internal space, weight estimation, hydrostatic particulars, stability, analysis of the consequences of flooding, icing and wind, propulsive power, and propeller design, etc.

In addition, there is a data bank that contains numerical descriptions of the shape and properties of equipment that is invariant from design to design. The entire system is interactive and includes an active graphics capability by means of a light pen. It is minicomputer based and would thus be attractive to a wider section of the profession.

a. Selection of Preliminary Ship Characteristics

The problem of optimal selection of the ship characteristics in a systematic manner involves the maximization, or more usually the minimization, of an objective function that serves as a measure of merit for the design. One possible approach to this problem is that of parametric variation, an approach that closely follows traditional procedures using the computer to do the extensive calculations needed, resulting in what may be called "semi-optimization." The alternative approach is the use of mathematical programming techniques where the problem is formulated as an object function being minimized subject to a set of constraints. The latter approach results in an automatic solution, while the former approach yields a set of curves showing the effect the variation of the parameters has on the measure of merit. Two examples, one of the parametric variation approach, and the other of a mathematical programming approach to the problem are given below.

(1) Example of a Parametric Variation Approach

In 1965, Murphy, Sabat, and Taylor presented one of the earliest applications of using parametric studies in determining the principal characteristics of a ship, Ref. [15]. Their method was applied to a general cargo ship, using average annual cost (AAC) as the merit function. The design variables used were the speed-length, length-depth and beam-draft ratios, the prismatic coefficient, and the displacement of the vessel.

(2) Example of a Mathematic Programming Approach

Nowacki, Brusis, and Swift (Ref. [16]), in 1970, gave a method using the sequential unconstrained minimization technique (SUMT) of non-linear programming for the preliminary design of a tanker using required freight rate (RFR) as the merit function. They considered the speed-length, beam-draft, beam-length and length-depth ratios, and also the block coefficient as the design variables.

b. Programs for Traditional Naval Architectural Calculations

Separate programs or program systems for carrying out traditional naval architectural calculations are fairly common in the industry, the profession, and the educational institutions that deal with naval architecture. These calculations may include longitudinal strength computations, intact and damaged trim and stability calculations, floodable length calculations, hydrostatic curves, powering, and capacity calculations. An example of one such program for traditional naval architectural applications is now given.

The U.S. Navy's Ship Hull Characteristics Program

A suite of routines used by the U.S. Navy and also widely by the industry is the Ship Hull Characteristics Program, SHCP, Ref. [17]. It consists of a set of subroutines that may be called on to perform a particular job by an executive routine. The programs use a table of offsets input by the user to set up the so-called Ship Design Table which then forms a data base for all subsequent calculations. The program is very modular. The set of sub-programs in the system are capable of the following naval architectural calculations: hydrostatics (including curves of form and Bonjean's curves), trim lines, longitudinal strength, floodable length, limiting drafts, intact stability, damaged stability cross curves, damaged statical stability, and intact statical stability in waves.

c. Computer-Aided Design Environments

The systems we reviewed under this heading were ones designed to provide support to the variety of software that may be used in the design process. Typically, they provide a data base and file-management capability, the capability to schedule and execute program modules in an interactive or batch mode, and quite often, the capability for the definition of a problem-oriented command language to perform the related activities. An example of one such system is given below.

U.S. Navy's COMRADE

COMRADE (Computer-Aided Design Environment, Ref. [18]) is a software system developed by the U.S. Navy to facilitate computer-aided ship design. The system is an executive system that aims to create a flexible environment for the operation of various ship design software. It would provide the individual programs with an easy interfacing capability so that the data pertaining to or output from one may be used by another. It would provide a good file-management mechanism for the various programs, and greater flexibility in the alteration and use of the various program modules themselves. The system consists of three parts.

(1) The data-management system that is the principal channel of communication to the data base for all the program modules. It contains full-file access and control facilities. It is an extension of a similar system used by CASDOS, Ref. [19].

(2) The program-management system that manages the various modules. It allows for the on-line documentation related to the use and modification of those programs.

(3) The executive system is the overall manager of the environment. Its command language definition and interpretation facility is patterned after that of the ICES System, Ref. [20].

The user of the COMRADE System may thus work through a problem-oriented language and, hence, require no programming experience.

2. Computer-Aided Hull Form Generation

Given the principal characteristics of the ship such as the length, beam, depth, and form coefficients, the designer is next faced with the necessity of having to develop a hull form to suit. The traditional ways of doing this included the fairing of lines derived from a sectional area curve or the altering of a parent form to suit the new form parameters. In automating hull definition, both altering a parent hull as well as surface-generation approaches of some sort have been attempted.

Example of a Hull-Form-Generation System

One approach to the definition of a hull form has been proposed by Aughey, Ref. [21]. The system would provide the user with full control over hull shape fairing. The user can specify the shape and modify it repeatedly after reviewing plots and tables of offsets until he thinks it is "fair." Hence, the term "hull definition" rather than "fairing", although the mathematical batten used to define the lines does a considerable amount of the latter. The program "HULGEN" is now in use for hull definition at NAVSEC, Ref. [22].

3. Detailed Design Calculations

a. General Purpose Finite-Element Programs in Ship Structural Analysis

The finite-element method made its appearance in 1943 when the French mathematician Courant proposed a method for the analysis of torsion using a method we now call the finite-element method. However, the method's real appearance and use in a form as we now know it is due mostly to work conducted in the early 1950's by Argyris, Ref. [23], at the Imperial College of Science and Technology in London; and by Clough, Ref. [24], at the University of California at Berkeley. With the increased use of the digital computer, this method has become the predominant method for the analysis of complex structures. The earliest applications of the displacement-based finite-element method to ship structures was due to Paulling at the University of California at Berkeley, Ref. [25]. The U.S. Navy program FINEL is derived from his work, Ref. [26].

For present day ship hull related applications, most of the large purpose analysis programs such as NASTRAN, ANSYS, STRUDL, STARDYNE, SAPIV, and DAISY are being used. NASTRAN, for instance, is used extensively by the Lloyds Register of Shipping, DAISY by the American Bureau of Shipping; and SESAM-69 by Det norske Veritas. In this section, we confine ourselves to the programs that were developed in association with the marine field. One characteristic of some of these programs

is that they include a capability for multilevel super-element analysis. The other is perhaps the use of extensive pre- and post-processor systems that often include a graphics capability.

The advantages that accrue from simplifying the input-data preparation and entry and also interpretation of the results obtained by the use of graphics need no emphasis or elaboration. The advantages of the super-element technique in ship structures accrue from the simplification and shortening of input-data preparation for repetitive structural parts. Their stiffness properties need only be calculated once. Modifications of configuration and reidealization of parts of the structure are relatively inexpensive since only the affected super elements need be changed. The super-element method has in general proved to be numerically more accurate compared to the usual zero-level idealization. A little reflection on the repetitive nature of the ship sub-structures will convince the reader of the desirability of a computer program meant for the analysis of ship structures including a multilevel super-element capability.

We now will give an example of a minicomputer-based system for the finite-element analysis of complex structures that has both a multilevel super-element and a graphics based input and output capability.

The GIFTS System

The GIFTS (graphics oriented interactive finite-element-analysis package for time-sharing systems) was developed by H. Kamel of the University of Arizona who also developed the original DAISY system used and further developed by the American Bureau of Shipping. GIFTS may be implemented on a minicomputer with disc storage. Graphics terminals provide full access to all data.

The entire GIFTS system consists of a set of modules that operate on data from a unified data base (UDB) made up of random access disc files. It is possible to input parts of UDB to general purpose structural analysis programs such as NASTRAN, DAISY, or SAP. The output from these programs may be incorporated into the UDB and GIFTS' own post-processor modules may be used to display the results.

The system can generate the structural model, display the whole or parts of it, and edit it, Ref. [27]. It can display displacement and stresses that were part of the UDB by GIFTS or some other program. Its static analysis capability is provided by a library of finite elements suitable for two- or three-dimensional trusses, frames, and shells. The analysis by sub-structuring and constrained sub-structuring, the free-vibration analysis by the subspace iteration technique, the analysis of transient response to a user-specified time-varying load by the direct integration and the mode-superposition techniques are some of the features of the GIFTS system.

The GIFTS system is designed to be flexible, interactive, expandable, and modifiable. It is designed for a low-core requirement which renders it useful for use in computer-aided design systems using minicomputers and time-sharing systems. There exists the possibility of modifying this system so that it may be used for the preliminary structural design of ships in a scheme that aims at a fully stressed design. A pre-processor can suitably generate the necessary finite-element mesh that may then be input to the analysis program in an iterative design cycle.

b. Programs to Compute Ship Motions and Sea Loads

There are two distinct levels of sophistication as regards to the methods used by programs that are designed to compute the loads on a ship hull in a sea way. One is the traditional and time-honored quasi-static approach where the ship is essentially poised on a wave configuration at rest. The loads thus imposed on the structure, whether shear, bending, or torsional, are then computed. The second level is the use of strip theory to calculate the response amplitude operators of ship motions and resulting sea loads. One may then go through an input-output procedure to obtain the statistical values of the loads in a random sea characterized by a spectrum. Usually, in the second approach, only the rigid-body motions are considered. There are, however, programs available, such as the SPRINGSEA, that account for the hull girder flexibility which can be important in the case of long and slender ships such as those operating in the Great Lakes. We now give an example of a package of programs that calculate, in a rational manner, the loads on a ship at sea.

DnV's "Wave Loads on Ships" Package

The package (Ref. [28]) consists of some programs that operate independently and others that are linked together in some fashion. These programs are:

(1) A program is available to calculate the motion and load transfer functions, as well as the pressure-transfer function at any point on the hull surface. This is essentially the NSRDC Ship Motions and Sea Loads program, Ref. [29]. This is a widely used program in its own right.

(2) The wave loads on large floating or fixed objects of arbitrary form in regular waves using a three-dimensional source sink method including added mass, damping, linear dynamic pressures, non-linear horizontal drift forces and moments, and linear wave-excitation forces and moments may be computed by another program in the package.

(3) The transfer functions for pressure or motion computed by the two hydrodynamic programs above may be used to generate the loads at arbitrary points on the structure in one or more irregular sea states. The resulting loads may be transferred automatically to SESAM-69 or other structural analysis programs for the calculation of instantaneous stresses.

(4) A program for the computation of short- and long-term distribution of wave-induced motion and loads for ships and offshore structures is included. From known transfer functions of motions, the statistical distributions are computed. The probability of slamming and slamming pressures can be computed knowing the motion transfer functions. Several known transfer functions can be combined for the analysis of a new variable.

(5) The vibratory resonant response of the ship hull to a long-crested Pierson-Moskowitz-type wave system are computed for different ship speeds, ship heading and average wave periods by another program. The vibratory response is given in terms of bow displacement, bow acceleration and the midship bending moment.

(6) A program that simulates the waves (parameters such as fluid displacement, velocity, and dynamic pressures) in a sea of arbitrary depth for a given wave spectrum. If the input transfer functions are known for the ship, the program will compute the motion and load responses.

c. Rule and Direct Analysis and Design

Classification societies generally offer programs for the scantling determination of ships based on their relevant rule requirements. Examples are the ABS/RULESCANT programs, Lloyds Register rule-requirement programs, and DnV's CBC classification-rule programs. The idea behind leasing or selling these programs to clients is that they would only need, in most cases, to have their input checked, and not have to submit and wait for the society's approval of the design details. The efficient and automated use of these programs would result in some savings to the user.

The present trend among classification societies is to accept designs that conform to their rules literally or those deemed acceptable by the use of more direct calculation means from what may be called first principles. This has been necessitated by the fact that many new marine structures of the day cannot be obtained by any reasonable extrapolation of the traditional classification society rules for a lack of past experience with them, if nothing else. The programs described in this subsection are symptomatic of this change in philosophy. They are offered as packages that could be used in the analysis and design of ship structures.

(1) Lloyds Register LR.PASS System

Lloyds Register of Shipping's Plan Appraisal System LR.PASS, Ref. [30], consists of the four components that are briefly described below.

The LP.SHIPS System

This program system is meant for the evaluation of hull primary strength. The hull form and weight distribution are specified. The still-water shear force, bending moments, and deflections are computed. A strip-

theory approach is used to obtain the response-amplitude operator in regular waves. The wave-induced loads and motions may then be calculated for any given sea condition. The midship section is then designed. The design of the hull may be checked by the grillage and plane-frame analysis modules available. Structural stability is similarly checked. A torsion analysis of the grider may be performed if needed. The use of graphics makes the display and correction of input and other generated data easier. Display and plots of the hull form, the response-amplitude operators, and the stress contours may also be made. To facilitate design, programs for supplying steel section properties are available.

The LR.SEAS System

This subsystem of LR.PASS is concerned with the environmental load analysis of ships. A strip-theory program for the calculation of ship responses in regular waves is included. The long-term prediction of responses and the short-term prediction of maximum wave impact pressures is made for specified sea state distributions the ship is likely to encounter.

The LR.SWASH System

This subsystem of LR.PASS is aimed at sloshing wave analysis in ship's holds. The computation of liquid pressure in smooth tanks may be computed. A response analysis for panel and stiffener collapse due to sloshing loads may be carried out.

LR.SAFE: Ship Analysis Using Finite Elements

This is an analysis and redesign system for the ship hull using the finite-element displacement method. Pre-processors generate the loads to be imposed. The input necessary for a large analysis program, in this case, NASTRAN, is simplified by the extensive use of data generation for repetitive geometries and digital plotters to verify the mesh generated. Interactive graphics and the keyboard may be used for data preparation and editing. The analysis itself is performed by NASTRAN. Post-processing consists of checking the results against permissible stress levels and evaluating the buckling factors of safety. The results of the NASTRAN analysis, e.g., deflections and stresses, may be interactively displayed. The redesign phase would consist of modifying the scantlings. For cases where the geometry of the structure is fixed and only plate thicknesses and stiffener areas are modified, an automatic design system to derive a fully stressed design including buckling constraints is currently being implemented.

(2) DnV's Hull Design and Analysis Package

The HULDA package, Ref. [31], developed by Det norske Veritas combines some of the common calculation procedures used in structural design with a view to providing the longitudinal and transverse structural scantlings accurately within a short time. Both rule-dependent and direct-analysis programs are included. The results from one program may be stored on a data base and used by any of the others. The system has the following capabilities.

(i) A program in the system is provided for defining the geometry of the hull form and calculating the section areas, volumes, moments, etc. The results may be stored on the HULDA data base.

(ii) The hull section modelling program is used to define the geometry of a transverse section complete with all the longitudinal material. Certain section and member properties may also be calculated.

(iii) The rule analysis and synthesis program may be used to complete the above model and check it for compliance. It may also be used to design the transverse section within the context of DnV rules.

(iv) A program for the computation of transfer functions for the six-degrees-of-freedom motions of the ship is included in the package. The program computes, in addition, the transfer functions of pressure at any point on the hull surface. It can also compute the horizontal and vertical shear forces and bending moments and also the torsional moment for any cross section along the ship in regular waves. The response spectra themselves may then be computed. The short-term response and the long-term statistical distributions of wave-induced motions and loads in short- or long-crested seas may then be computed. The traditional shear force and bending moment calculation may also be done by another program.

(v) The two-dimensional shear-flow and stress-calculation program may then be used to compute the shear-flow distribution and stresses due to arbitrary forces and moments acting on the already defined transverse section. A utility program may be used to plot the section stresses or shear flow.

(vi) There are programs provided for the three-dimensional frame analysis of the hull sections or parts. The optimization of the structure idealized by beam elements is also possible.

(vii) For the particular case of a tanker, there are routines provided that position a specified number of longitudinal and transverse bulkheads optimally for maximum deadweight using SUMT technique. The IMCO regulations, allowable shear forces and bending moments, and trim and draft restrictions are considered.

(3) ABS' Design and Analysis Package

The American Bureau of Shipping's design and analysis programs consist of the ABS/DAISY system of computer programs and other, separate computer programs. Some of these programs are briefly described below.

(i) There is a program to calculate hull girder shear forces, bending moments and vertical deflections of a ship in either still water, or statically poised on a wave.

(ii) A program for the calculation of a ship's motion and the hydrodynamic pressure is available. The program is an extension of the program SCORES with additional capabilities. Among these added capabilities are statistical analysis of a ship's response using measured or theoretical wave data, and calculations of wave-induced hydrodynamic pressure on a ship's hull. The latter can be subsequently converted to dynamic load input for the DAISY finite-element structural analysis program.

(iii) The DAISY system of programs analyzes the structure using finite-element methods. Extensive use is made of pre- and post-processors along with computer plots of the structure and deflections.

(iv) The SHIPOPT program is capable of optimizing any longitudinally prismatic section of a ship. Once the geometry of the ship has been laid out (beam, depth, frame spacing, stiffener orientation, and the placement of bulkheads and girders), the program determines the optimal plate thicknesses, girder and stiffener scantlings, and stiffener spacing. The initial user-supplied scantlings can be arbitrary and do not affect the final design. In addition, the ship geometry is easily changed so that one can produce an optimized design for various structural configurations. The measure of merit can be user supplied and can realistically reflect the cost versus weight trade-off involved in building a ship. After each design cycle, the program performs a finite-element analysis and then checks for various limit states such as structural stability, tripping, and excessive stresses in the plating, girders and stiffeners. This insures that the final, optimized design is structurally sound. This program is currently being implemented as part of the ABS system.

d. Structural Optimization in Ships

Optimization should play an important role in the structural design of ships for two reasons. The first is that the structure itself may account for a major part of the cost of the ship. The second is that reduced structural weight implies an increase payload. Given these incentives, and the continued widespread use of electronic computation, more refined methods of structural optimization are coming into use.

The design of complex structures such as aircraft and ships can be conceptually seen as a multilevel optimization problem. At each level, the problem may be subdivided with different objectives and constraints for that level. There are various techniques for solving the general optimization problem. We will, here, survey some efforts in structural optimization that are of interest to the ship structural designer. The work that we have surveyed falls into five categories:

(1) Optimization by Differential-Calculus Techniques

(2) Directed Parametric Studies

(3) Mathematical Programming Techniques

(4) The Use of Optimality Criteria in Structural Design

(5) Approximate Optimization

(1) Optimization by Differential-Calculus Techniques

Perhaps the first set of optimization techniques that come to our mind are the differential-calculus-based ones. Early attempts at structural optimization in ships were in this direction. They involved developing closed form equations, e.g., for the weight of the structure, and determining the optimal set of design variables by differential-calculus techniques; see Vedeler, for example, Ref. [32]. The approach is a powerful one when it can be used, which is only for the simplest of structures.

(2) Directed Parametric Studies

An intuitively satisfying approach to structural optimization may be a directed parametric study where the parameters are systematically varied,

and the effect of their variation on the objective function (cost or weight, for example) is studied. An example typical of this approach, which pertains to the synthesis of the midship section, is given below.

Midship Section Synthesis as an Example of a Directed Parametric Study

As an indicator of weight and cost, the midship section is very representative of the rest of the hull. Many early attempts were aimed at gleaning design criteria from classification society rules that at that time were given in the form of tables. From these efforts emerged various formulae pertinent to the design including loads, allowable stresses, corrosion allowances, and margins of safety. Efforts in that direction that we may mention are those of Evans, Ref. [33], Antoniou, Ref. [34], and Vedeler, Ref. [35]. These efforts were followed by the development of a number of computer programs to synthesize the midship section. A series of such programs were developed at M.I.T. The latest in that series, Ref. [36], that seems to supersede the others is described next.

The M.I.T. Midship Section Synthesis Program

In this program, the sections may be framed transversely, longitudinally, or in some combined fashion. The materials used may be varied in zones throughout the cross section. In addition to the longitudinally effective material, the program will size the transverse structural framing. For longitudinally framed structures, the transverse framing consists of web frames, now directly derived from ABS rules. For transversely framed structures, transverse deck/shell stiffeners are used. Upon completion of the design, a weight and cost estimate is made for the section. The design criteria used includes standardized loadings, corrosion allowances, and limiting stresses adapted from general practice or gleaned from rule requirements. The procedures used are of general applicability.

(3) Mathematical Programming Techniques

For a brief introduction to various methods of mathematical programming, see Ref. [37]. A consideration in choosing a method to solve the optimization problems lies in the nature of the design variables. While member sizes and geometry are relatively easy to handle, since they are continuous variables, material properties on the other hand have discrete values. Material variation is not readily amenable to a mathematical programming approach. The simplest problem to solve, in this context, is the one where member sizes alone are varied for a given fixed geometry and material. A considerable number of structural optimization problems are amenable to this treatment.

The natural expression of the structural optimization problem is in the form of constrained minimization. In this approach, one is required to find a set of design variables such that the measure of merit (e.g., weight or cost) has a minimum value subject to certain constraints (stresses, displacements, or other response characteristics). Constraints would include minimum thicknesses, based on practical considerations such as corrosion and buckling, in order to obtain a realistic design. The convergence to a solution of constrained minimization problems depends on the mathematical characteristics of the merit and constraint functions. In general, the simpler the functions, the better the convergence.

The recasting of the constrained minimization problem into an unconstrained one gives us some advantages. The first is that more efficient algorithms are available for the unconstrained case. The second is that in

reformation the problem in an unconstrained form, the nature of the measure of merit and constraint functions have little influence on the formulation. This means that more complex problems may be handled, thus increasing the range of applicability of the optimization procedures. A third concommittant advantage is that this procedure can be coded for the computer in a form where the analysis and optimization stages are independent. In addition, a numerical search method will, under this formulation, virtually guarantee convergence to a local optimum.

The solution strategies to the general non-linear programming problem are of three types. The first are the "feasible direction" methods where the search for an optimal solution is first directed towards the boundary of a feasible region, and then continued along the boundary, in a manner of speaking. The second category of methods involve a sequence of linearizations of the problem, each more accurate than the last and each solved very rapidly by the Simplex algorithm. An example is the SLIP2 method developed by Hughes and Mistree, Ref. [275]. Their method obtains improved linearizations by using some second-order information. The third category consists of penalty function techniques that effectively transform the constrained problem into an unconstrained one by the addition of a penalty term to the objection (merit) function. In the solution process, the penalty term would reflect the violation of a constraint. The work carried out at the Norwegian Institute of Technology falls into the third category. They use, almost exclusively, an interior penalty function technique well known as Sequential Unconstrained Minimization Technique (SUMT). This approach uses a penalty function that is repeatedly minimized for a sequence of decreasing values of a so-called "response factor" in the penalty term; see Fiacco and McCormick, Ref. [38]. Various examples of applications of mathematical programming methods to optimal ship structural design using SUMT, e.g., to the midship structure of tankers and bulk carriers, to the design of web frames of tankers and to grillages may be found in the table in the Appendix. We now give here some examples of programs that use mathematical programming techniques for ship structural design.

The U.S. Navy's Structural Synthesis Design Program

SSDP (Ref. [39]) was developed by DTNSRDC for NAVSEA. It may be used to design the longitudinal scantlings for a variety of midship section configurations consisting of any practical combination of decks, platforms, and bulkheads. A combination of materials may be used. The final design will be chosen to have the lowest weight for the given geometry and loads and comply with the relevant U.S. Navy Standards. To use the program, the user inputs the section geometry, the nominal primary hull girder stresses, the secondary loads, the plate and beam materials, the ranges of beam spacings to be investigated and other specific data. The program is capable of material addition in the right places until the scantlings determined are structurally adequate. The program is batched processed.

SHIPOPT

SHIPOPT (Ref. [166]) was developed at the University of New South Wales, Sydney, Australia, under ABS sponsorship. It optimizes the scantlings of all girders, frames and stiffened panels in any segment of the hull girder (i.e., any number of adjacent cargo holds). Pillars, transverse bulkheads and brackets are modelled but are not optimized. The principal features are:

(i) A rapid, design-oriented finite-element program developed especially for structural optimization.

(ii) A comprehensive set of subroutines for the accurate estimation of the various modes of ultimate strength and other limit values, nearly all of which are non-linear functions of the design variables.

(iii) For the current design (as the optimization proceeds) the calculation of the lowest margin of safety for each limit state, and the location and loadcase where each lowest value occurs; this allows the method to be used for the comprehensive evaluation of a given design, as well as for producing an optimum design.

(iv) A complete set of partial safety factors which account for the various uncertainties (in loads, load effects, and limit values of load effects, the latter being due to variations in material quality, workmanship, fabrication, etc.) and which also account for the degree of seriousness of all relevant limit states. These factors are chosen according to a target level of reliability. The method can accommodate multiple loadcases, each with its own set of partial safety factors, in order to allow for any special or unusual conditions or modes of operation.

(v) The automated formulation of the complete set of mathematical constraints arising from the various limit states; these constraints, which incorporate the various partial safety factors, ensure that the target level of reliability is reached. The method can also accommodate any number of user-supplied constraints which represent other design requirements arising from fabrication (e.g., minimum and maximum sizes, uniform sizes, etc.) or operation (e.g., fatigue, dynamic load effects, access, etc.).

(vi) An optimization method based on a new form of sequential linear programming which is capable of solving the resulting large-scale, non-linear, highly constrained optimization problem. The objective may be any continuous non-linear function of the design variables, such as weight or cost.

The INDETS System

INDETS (The Integrated Design of Tanker Structures) is a BOSS subsystem. BOSS, deveoped by the Technical University of Trondheim in Norway, is a design environment in which various ship structural design programs operate. The following summary of the INDETS routines and the tanker design philosophy used was obtained from Ref. [40]. The INDETS system has since undergone some modification, Ref. [41]. The structural design procedure for tanker structures may be thought of as an iterative sequence of the following tasks:

(i) In the design of the longitudinal strength members of the hull girder, considerations include buckling. The ship is assumed to be a beam, its transverse sections remaining undistorted. LANOPT is a program under the BOSS system for the optimum design of the tanker midship section. The principal dimensions of the ship, and the position of the main transverse and longitudinal members (bulkheads, web frames, and girders) must be known. The program then determines for the deck, bottom, sides, and the longitudinal bulkheads, the following: plating thickness and spacing and sizes of longitudinals. The weight or cost of the section may be used as the measure of merit. The design is required to comply with DnV rules.

(ii) The next stage in the design can no longer assume a rigid cross section. This part of the process involves the design of the transverse bulkheads. Either a conventional or a corrugated design may be chosen. The analysis is carried out by grillage theory. The interaction of the bulkhead with the longitudinal material (treated by springs) must be considered. The spatial correspondence of the bulkhead stiffeners with the longitudnal elements is usually a requirement. KOROPT is a program in the BOSS system that performs the design of vertically corrugated transverse bulkheads. The bulkhead design is required to comply with DnV rules. The weight of the bulkheads, excluding stringers, is used as the measure of merit. The length of the ship and the breadth and height of the bulkhead is input, together with the distance between the bulkhead and the swash bulkhead and the number of horizontal stringers. The output consists of the dimensions of the corrugation, distances from the deck to the stringers, and the thicknesses of the plate strakes between the stringers.

(iii) The effect of distortions of the cross section may now be studied with the aim of estimating the relative deflections between supports of transverse frames. The distribution of shear forces between the longitudinal bulkheads and the ship sides also needs to be obtained. A coarse grillage consisting of the ship sides, centerline girder, the longitudinal bulkheads, transverse frame, wash bulkheads, and oil-tight transverse bulkheads is modelled and analyzed for various loading arrangements. The initial runs lack detailed information on the transverse frames which have not yet been designed. Approximate empirical data is then used in place of such detailed information.

(iv) The next task is to design the transverse frames. A topology for the frame is decided on. Plate thicknesses were determined under Item (i). The scantlings of the frame, including all stiffening, needs to be obtained. RAMOPT is a program available in the BOSS system for the optimum design and analysis of statically indeterminate frames. The frame topology is input. The information includes nodal coordinates and support conditions. A description of known element properties such as cross section types, and flange areas for elements in the side, deck, or bottom are input. The loads imposed on the structure and the spring constants at the supports may be automatically generated. One item for each member, e.g., the cross-sectional areas of the webs of the elements, is optimally selected. The weight of the frames excluding the flange plates is used as the measure of merit. Stress constraints are imposed on an equivalent stress computed by means of the von Mises yield theory.

GIROPT is another program in the BOSS system for the optimal design of steel girders. The length of the girder, the bracket sizes, the distance between the tripping brackets, the end loads on the girder, distributed loads on it and the area of the flange plate are input. The web height, the area of the top flange and the web thickness, as well as the numbers and moments of inertia of the transverse and longitudinal stiffeners are determined. The stress constraints are based on an equivalent von Mises stress. Buckling constraints are imposed. Constraints pertaining to the natural

frequencies of the girders are also imposed. The number of stiffeners are treated as integer variables. The weight or cost of the girder may be chosen as a measure of merit.

(v) By a frame analysis unit-load procedure, the stiffness characteristics of the transverse frames may now be evaluated, and used in Item (iii) for the grillage anlaysis of large portions of the ship.

(vi) A finite-element study of a large portion of the hull may now be in order.

All the automated design programs employ the sequential unconstrained minimization technique SUMT for the NLP problem. LANOPT, KOROPT and RAMOPT use a search routine based either on Powell's or on Rosenbrock's direct-search methods at the user's choice. GIROPT uses a modified version of the same general search program that can account for integer requirements for some or all of the variables.

The General Purpose Optimization Software (OSW)

OSW, Ref. [42], was developed at the Technical University of Berlin (TUB). The software may be used for the optimization of any structure that the designer can provide analysis programs for. It presents the designer with a bank of optimization methods and an interactive capability for problem formulation. The interfacing strategy between the optimization modules and the general design application programs (analysis, etc.) is particularly worth mentioning. The OSW package was developed for implementation on the IST (Technical Information System), a CAD system used by German shipyards. The OSW code is about 25% system dependent.

The Interfacing Strategy used by OSW

The input and output files of the analysis program would be separate from the optimization software. At the time of the problem execution, the designer specifies the symbols in the input and output modules to the analysis program in a special file called the "communications symbols file." The designer would then specify the design variables, measure of merit and constraints in terms of the "communication symbols" and arithmetic expressions made up from them. This information (symbols and relationships) are stored on "the basic format file". These two operations complete the interface between the analysis and the optimization modules.

The execution time strategy is as follows: The optimization strategy selected by the user will update the input to the analysis program on the basis of the "communication symbols file" and the "basic format file." The analysis program returns an output that similarly updates the optimization input.

The OSW software is not restricted to structural analysis application programs. At present, the bank of optimization methods available consists of SUMT, a penalty function technique, and TANGENT SEARCH, a feasible direction technique. Others may be easily added. (For a general discussion of these optimization methods, see Page 21; also, Ref. [37]).

(4) The Use of Optimality Criteria in Structural Design

The use of mathematical programming methods to obtain an optimum structure is an operation that does not use any criterion that takes advantage of the nature of the problem. An optimum that would be impossible or uneconomical to better is the only implied pre-condition in the whole procedure. This gives the procedure a generality. On the other hand, no use is made of any particular characteristic of the problem that would permit a more efficient solution.

The use of the optimality criteria in structural design aims to do this. These criteria are defined prior to the redesign phase. They serve as a guide to the selection of the appropriate path to the optimum. Their application would lead to recursion expressions for use in the redesign phase. The most obvious example of an optimality criteria is the fully-stressed design. This is used in automated design of structures, for example, in the BOEING/ATLAS system. The Lloyd's Register's LR.SAFE (Ship Analysis by Finite Elements) will soon have this capability. This choice of the fully stressed design as an optimality criterion is widespread. Its justification is the presumption that in optimal structures, each member will be fully stressed in at least one of the several applied loading conditions.

Although intuitively satisfying, it is not theoretically correct that a fully-stressed design is optimal, say in terms of weight; that is strictly true only for statically determinate structures, Ref. [43]. There is no way of telling when one may obtain a fully-stressed design of minimum weight, and when one may not. What is clear, however, is that in general application, this method is efficient in that the number of iterations needed to converge to a fully-stressed design, say using the usual stress ratio method, is independent of the size of the problem. Hence, the method appears suitable for large problems. This approach is used often as the only practical method of optimal design of large complex structures. Mathematical programming techniques are complex and, more often than not, impractical because of computational considerations in such structures, even with today's electronic computers. In practice, the fully-stressed design is often found to be a close approximation to the minimum weight design.

There are other approaches to the selection of the optimal structure besides the stress-ratio method for fully-stressed design. Barnett [44] considers the use of displacement limits for statically determinate structures under single loading conditions. Venkayya, Ref. [45], uses the uniform-distribution strain-energy density as a pre-condition for a minimum weight structure. The reader is referred to the table in the Appendix for examples of the use of optimality criteria.

An Example of the Use of Optimality Criteria in Ship Structural Design

Finifter and Mansour, Ref. [46], describe the optimization of web frame of a tanker with an isolated ballast system. Their method is general and may be applied to other structures. The procedure was to minimize the weight of the web frame using an optimality criterion based on fully stressed design: A double-iteration procedure which uses the results of analysis in conjunction with a stress-ratio method to accelerate convergence was developed. It allows for the efficient use of the optimization program in conjunction with finite-element analysis. Their analysis scheme employs a combination of gross- and fine-mesh schemes.

(5) Approximate Optimization

For large structural problems, the complexity and computational costs of applying mathematical programming based optimization can be prohibitive. One method for dealing with this problem is approximate optimization of the structure, Ref. [47]. In this approach, the substructures of a complex structure are pre-optimization using rigorous techniques. These parts (panels, beams, etc.) are available in a data bank to the main program. That program investigates many feasible combinations of these substructures to evaluate their relative merit, using relatively simpler engineering analyses that allow it to evaluate a larger number of such permutations and combinations. The advantage of the method is in the rapidity and economy of the solution.

e. An Approach to the Optimal Design of Ship Structures

The optimization of ship structures is very complex if a realistic and complete approach is to be made to the problem. We offer a possible simplified scenario for the optimal design of ship hull structures.

A preliminary design optimization would lead to the main dimensions of the ship. We would then know the outer dimensions of its larger structural members such as web frames or bulkheads, once their positioning is determined. Another stage of the optimization process would select the location of watertight bulkheads and other main transverse members. Floodable length requirements and internal arrangements such as the engine room placement would be a factor in this choice.

Optimization of any single structural member may now be done. The first step is the choice of the general configuration of the member. Among several possible general topologies, one would be chosen as best in some sense. The objective function would be the weight, the cost, or a combination of both.

Once the topology or main geometrical shape is decided upon, we may idealize the structure for design purposes. In the case of a web frame, for instance, this may consist of many zones of plating over which the thickness is essentially uniform. Traditional methods of straking would give the designer a good idea on how to do this. The structural idealization would be subjected to a set of loads. This is in itself a complex problem, but may be simplified keeping in mind the rigor of intended application. The analysis method would be the finite-element technique for the general structure. It is well suited for analyzing complex configurations, boundary conditions, and a mix of many types of structural members. The constraints could be defined in terms of maximum stress levels and buckling-related critical stresses for the different panels. The use of classification society rules and criteria would of course simplify some of these aspects of load definition and analysis. However, such a solution is optimal only in the context of those rules.

The question of what optimization technique to use depends on the type of the problem. For the placement of bulkheads and other preliminary design applications, nonlinear programming methods such as SUMT may be used. A mixed integer method is sometimes the correct one in structural applications. Methods that consider the design variables as continuous instead of discrete quantities may sometimes be simpler to use as an approximation. Some devices such as the stress ratio method may have to be employed together with the analysis scheme so that the convergence to the optimum is accelerated and the number of reanalyses needed reduced.

4. Production-Related Applications

a. Computer-Aided Design and Manufacturing Systems (CAD/CAM)

These systems generally have some traditional design functions such as the computation of hydrostatic data, or the hull form design integrated with some manufacturing functions such as shell expansion, parts programming, or other production aspects. Though the individual program modules of these systems may belong elsewhere in the report, they are given together here in the example in order that the reader may gain a better idea of the synergetic nature and the total capability of those systems.

The U.S. Navy's CASDAC System

The CASDAC (Computer-Aided Ship Design and Construction) effort of the U.S. Navy began in 1964 at the Naval Ship Engineering Center (NAVSEC) with the general assistance of DT NSRDC, Ref. [48]. The CASDAC systems available at present are as follows:

(1) The CASDOS (Computer-Aided Structural Detailing of Ships) System

CASDOS, Ref. [19], was developed for the U. S. Navy under a contract with Arthur D. Little, Inc. It is a large system of programs that take as input the information from contract drawings and specifications. Additional data to be input consists of faired offsets of the hull, location of master field welds, and maximum plate sizes. From this information, various structural segments will be defined, the contract design scantlings verified, the individual elements located, and the plating straked. The program system will also select connection details including welding and carry out a weight estimation. It will produce detailed structural drawings for any part of the ship. Other outputs include weight summaries, alignment reports, stiffener fabrication reports, bills of materials and numerical tapes for frame cutting and welding. CASDOS is directed towards the full process automation from design through production. Parts programming which is a feature of AUTOKON and other similar production oriented systems is eliminated and Numerical Control tapes may be automatically generated.

(2) The Integrated Ship Design System (ISDS)

This system, Ref. [49], is meant as an aid to engineers in synthesizing a ship in the concept formulation phase and to facilitate the exchange of information required by the different disciplines that interact in the ship design process. The operational modules will share a centralized data base. ISDS operates primarily in an interactive manner from teletype terminals or graphics scopes. The ship design process will be conducted by a team by the use of a user-defined Problem Oriented Language (POL) for the design activity.

ISDS is being developed at DTNSRDC for NAVSEC and is now in operation in a skeletal form. ISDS will in its functions be supported by the COMRADE (Computer-Aided Design Environment System) developed at DTNSRDC and described elsewhere in this report. In addition to the two subsystems CASDOS and ISDS, the integrated CASDAC system includes subsystems for piping design and construction and for electrical cabling/wiring; see Appendix.

b. Computer-Aided Production Systems

The largest part of a shipbuilding budget is construction related as opposed to design related. Hence, there has been a major effort in shipyard automation aimed at reducing construction cost. Many integrated production software systems have been developed for this purpose. They differ in detail, but generally provide the following capabilities:

(1) Hull definition: Either by fairing or surface generation. This results in a table of faired offsets or equations of some sort and a numerical definition of the molded hull surface at every frame location.

(2) Parts programming: This generates a numerical description of each piece of the ship. A problem-oriented language is used to accomplish this description easily. The hull curvature information is obtained from the results of hull definition. Usually, NC tapes can be produced for the flame cutting of each part.

(3) Nesting: This aims at arranging individual parts on a larg plate with the minimum wastage: The numerical description of the parts to be nested together with the location of "cutting bridges" is used to obtain an NC tape for the nested plate cutting operation.

(4) Shell expansion: The user specifies the seams and butts of the hull plating. The hull form is obtained from the hull definition results. The flat outline of each plate is then obtained.

In addition, some of the systems can interface with programs that perform standard naval architectural calculations using the hull definition results, e.g., AUTOKON interfaces with PRELIKON. AUTOKON, a widely used production system, is described below.

The AUTOKON System

The AUTOKON system, Ref. [50], was a joint effort of the Central Institute for Industrial Research and the Aker Group of Shipyards in Norway. The system was first used in the United States by the Quincy Shipbuilding Division of General Dynamics in 1965. A considerable extension of the system

in the years 1966-1970 resulted in the AUTOKON-71 which MARAD acquired. The system is in use in at least five U.S. shipyards and many others around the world, Ref. [51].

The AUTOKON is primarily a system for lofting and the generation of numerical-control information for cutting of ship hull plates. Bills of materials and workshop documentation may also be generated by the system. We now describe briefly the general features of the AUTOKON system.

(1) Fairing the hull form: The AUTOKON approach to fairing is an automation of the manual graphical method of fairing of offsets by alternating between water planes and the sections until a level of tolerance is reached. Human interfacing is necessary in the process.

(2) Parts programming is performed by a problem-oriented language called AUTOKON which is used to define the shape and position of each plate. From this description and the previously stored/generated digital information of the hull form, plate contours are generated.

(3) Nesting of plates on a steel sheet is done in a non-automated interactive manner. Once this is done, a computer procedure produces the final NC tapes for automatic punch marking and flame cutting.

(4) The shell plate is developed by a triangulation procedure.

5. Information Systems in Shipbuilding

Computer-based information systems are now coming into use for a wide range of tasks including shipyard production planning and control, scheduling and project management, accounting, material ordering and inventory control. The main advantage of these systems is that a vast quantity of information can be handled, and almost instantaneous reports on the status of tasks and schedules can be available. Most of these systems are personalized to the particular techniques and operations of individual shipyards. An example is given of one such information system meant for shipyard use. Others are given in the Appendix.

Shipyard Management Information System of the U.S. Navy

The U.S. Navy's Shipyard Management Information System, Ref. [52], provides information necessary for the planning, scheduling, and control of production and repair work in naval shipyards. It was developed by the Bureau of Ships (now part of NAVSEA) and seven naval shipyards. Its subsystems are concerned with financial, industrial, material, and administrative functions. Information interchange is facilitated by the use of common terminology and reports produced in a standard format.

B. COMPUTER APPLICATIONS IN CIVIL ENGINEERING

This section provides an overview of our survey on computer applications to the analysis and design of civil engineering structures. Examples of early applications of computers in the field is first briefly outlined. The use of problem-oriented languages and integrated design systems is discussed. Then a review of general purpose finite-element software is given. Analysis and design programs for bridge and building structures are dealt with next.

1. The Development of Computer Applications to Structural Engineering

One of the first applications of matrix analysis to structural engineering was GISMO (General Interpretive Scheme for Matrix Operations). This was a matrix-calling approach used for the structural analysis of a 600' telescope by Ammann and Whitney in 1959. IBM Corporation's FRAN (Frame Analysis Program) made its appearance four years later, Ref. [53]. FRAN had a selected repertoire of matrix operations and would handle relatively large space frames. The program eliminated the need to call the individual matrix routines, and thus was born a black-box program. During the same period, Fenves and Miller at the Massachusetts Institute of Technology, developed STRESS (Structural Engineering System Solver), Ref. [54]. In this program, a POL was used so that the analysis of structures could be done in a language familiar to the structural engineer. This was a very popular program among the profession until a few years ago. STRESS later evolved into STRUDL (Structural Design Language), Ref. [55], which is now one of the ICES (Integrated Civil Engineering System), Ref. [20], subsystems.

2. Problem-Oriented Languages and Design Environment

For one to do more than merely use the computer, that is, to actively participate in the solution of the problem using the machine, the primary requirement is a communication language between the man and the machine. That language must be oriented to the problem rather than the machine. It must allow the user to specify his problem-solving requirements easily and clearly. It should not confine the user to a rigid mode or sequence of operations. All his commands and data must be entered free format. A command would represent an operation or group of operations the computer is required to perform. The problem-oriented language (POL) would consist of a series of commands that would include command names and data. An executive program would interpret these commands and act on them. To the user, the commands represent words from his own vocabulary and are thus easy to use.

One may note that a POL is not necessarily a luxury because it is often impractical to completely anticipate and pre-program an engineering design problem. Hence, part of the programming must be done at execution time when the engineer specifies the problem, the solution strategy, and the method of

display of the results from the solution. Thus a POL works best in an interactive environment. An early example of a problem-oriented language is COGO, Ref. [53], developed by Miller at M.I.T. for the solution of coordinate geometry problems related to highway engineering; another example is STRUDL, Ref. [55].

The need to set up subsystem commands in a manner that the integrated system could interpret and act on gave rise to a problem-oriented language meant for the system developer. This is sometimes called a command definition language. In addition to generating new subsystem related POLs, the command-definition language can be used to modify, add, or delete commands from an already existing subsystem. The design environment that has this command-definition-language capability may be termed a general-language analyzer. There are a variety of them in use. The early ones, released in 1967, were IBM's PLAN (Problem Language Analyzer), Ref. [53] and M.I.T.'s ICES (Integrated Civil Engineering System), Ref. [20]. We may also mention the GENESYS system, Ref. [56] and POLO (Problem Oriented Language Organizer), Ref. [57], both of which are more recent. The GENESYS system is discussed below as an example of design environment that serves to integrate engineering programs and is also a general-language analyzer.

The GENESYS System

The GENESYS system, Ref. [56], provides a means by which computer programs written in a language called GENTRAN, may compile and execute over a wide range of different computers. In 1967, a working group of structural engineers was established by the United Kingdom Ministry of Public Buildings and Works (now the Department of the Environment) to look at the computing needs of the construction industry. Their recommendations resulted in the emergence of the computer system GENESYS. GENESYS is now operative on many machines with differences in design; many of these machines have different operation systems. Computer software written in GENTRAN is thus machine independent and portable.

Another aim of the GENESYS system is to ease data preparation. The data are entered format free in either tables or with command words. Those commands may form a problem-oriented language easily understood by the engineer. The system has a command-language-definition capability similar to that of ICES, Ref. [20]. FORTRAN statements may be incorporated into the data. In GENTRAN, there are no references to peripheral devices, the allocation of which is a GENESYS system function.

3. General Purpose Structural Analysis Programs

The most popular approach to structural analysis at present is the displacement-based finite-element method. The method is well suited for complex geometries, a combination of materials and boundary conditions. Linear-

elastic solutions based on this method are thought to be consistently accurate. Partly due to this and partly due to their relative simplicity, programs assuming linear behavior are more popular than programs that aim at accounting for material and geometric nonlinearities. There is, at present, a proliferation of finite-element software, a situation attributable to a black-box view to program usage and to a lack of coordination in software development.

The programs reviewed here differ in size of the problem they can handle and in their capabilities. Some are limited to linear-elastic analysis while others have a nonlinear-analysis capability. Some have either active or passive graphics capabilities. They differ in the type and capabilities of their-finite element libraries. They differ in the numerical methods and solution schemes they use. They also differ in the amount of software engineering that they saw in their development. The engineering finite-element-programming systems which we list first are characterized by a certain modularity and flexibility not often found in a black-box-type approach to the programs. We also list the more familiar black-box-type finite-element software, together with their capabilities. We then discuss finite-element programs that are part of integrated design systems. Finally, the use of interactive graphics in structural analysis and software available for the purpose are indicated.

a. Engineered Finite-Element-Programming Systems

An engineered finite-element-programming system is one that gives the user the option of a variety of data manipulation tools and solution techniques that he may string together in a sequence suitable for his purpose. As an example of one such system, we may cite ASKA, which is described below. For other examples, see the Appendix.

Automatic System for Kinematic Analysis (ASKA)

ASKA, Ref. [58], was developed at the Institute for Statik und Dynamik in Stuttgart, Germany about the same time NASA was developing NASTRAN. It was also meant for the linear static and dynamic analysis of large systems. The organization of ASKA is well designed. It consists of a data management module, well organized, distinct and self-descriptive data entities, matrix-manipulation tools depending on the size and sparseness of the matrix, and control of the sequence of module usage being performed by the analyst through a control module. It is precisely this modularity and flexibility that makes ASKA an attractive program.

b. General-Purpose Linear Finite-Element Programs

These programs are used in a black-box manner, are very popular and can be quite efficient. An example of one such program is given below. The reader is referred to the Appendix for a more complete list.

SAP IV

It is a displacement-based general-purpose finite-element program developed at the University of California at Berkeley by E. Wilson. SAP IV Ref. [59], is an extension of SOLID SAP, Ref. [60], and can perform static and dynamic analysis of linear systems. Eigen-value extraction is performed by either a determinant search or by subspace iteration depending on the size of the problem. The dynamic response of the structure by external loading may be computed either by mode superposition or by direct integration of the equations of motion. The natural frequency calculations may also be followed by response-spectrum analysis. The SAP IV element library contains three-dimensional truss and beam elements, plane-stress and plane-strain membrane elements, three-dimensional solid-brick elements, thick-shell elements, thin-plate elements, thin shell, and pipe elements. Boundary elements with rotational and translational stiffness in the three coordinate directions are also included. The program is well organized (new elements may be easily added to the library, for example) and is quite efficient for both small and large problems. SAP IV at present can perform no substructuring, although a version of SAP developed by the SAP user's group has some substructuring capability. The program is written in FORTRAN IV.

c. Finite-Element Software for Nonlinear Applications

NONSAP (Nonlinear Structural Analysis Program) is a finite-element program meant for the static and dynamic analysis of nonlinear systems, Ref. [61]. The structure may be modelled out of a number of different finite elements. At present, the program's element library consists of the following elements: 3-D truss, 2-D plane stress and plane strain, 2-D axisymmetric shell or solid, 3-D solid, and a 3-D thick-shell element.

The nonlinearities may be due to large displacements, large strains, and material behavior. A variety of material linear and nonlinear behavior including linear elastic, nonlinear elastic, orthotropic linear elastic, variable tangent moduli model, and a curve-description model are available for the truss elements. For the three-dimensional elements, one may use either isotropic linear elastic or a curve-description model to describe material behavior.

The system response is calculated using an incremental solution of the equations of equilibrium. During the step-by-step solution, the linear effective stiffness matrix is updated to account for the nonlinearities in the system.

d. Finite-Element Software in Integrated Engineering Systems

There are a class of finite-element programs that are part of integrated engineering software systems. The best known of these perhaps is the STRUDL subsystem (Ref. [55]) of the Integrated Civil Engineering system ICES. STRUDL is described below.

STRUDL (Structural Design Language)

STRUDL offers a problem-oriented language capability to the structural engineer. The reinforced concrete design part of STRUDL provides for the proportioning of beams, slabs, and columns including the longitudinal reinforcement and for checking the adequacy of such members with the dimensions and reinforcement specified. In the latter case, flexure, shear bond, and deflection criteria derived from the AISC and ACI specifications are used. STRUDL may also be used to select steel members using standard rolled sections and the AISC specifications. Apart from the usual linear static finite-element analysis capability, STRUDL may also be used for the computation of linear-elastic buckling loads. Certain types of dynamic analyses are also possible. The program system provides a procedure for the nonlinear analysis of frames, plates, and shallow shells. A frame optimization procedure is included.

e. Interactive Graphics Systems for Use in Structural Analysis

Out of the total time spent on a large analysis project, up to 70% of the man-hours are spent in data preparation and editing, 20% of the time in the interpretation of the output, and about 10% for the actual problem solution on the computer. In this regard, the use of interactive graphics can be a significant help to the user. The subject has received considerable attention lately, Refs. [62, 63]. The benefits of such systems accrue largely from the ability to interpret volumes of data, the insights such a system allows into the physical behavior of the structures being analyzed, and in allowing interactive editing of output for reanalysis purposes. Many large general-purpose structural-analysis programs of today use graphics to some degree, most often for the display of results. An example is given here of an interactive graphics system meant for use in structural analysis.

The Control Data GIRAFFE System

The Control Data Corporation's "GIRAFFE" (Graphical Interface for Finite Elements, Ref. [63]) is a general-purpose interactive graphical application package meant for use with three-dimensional displacement-based finite-element programs. GIRAFFE is an integrated pre/post-processor to a structural analysis program with its own data base. It facilitates the generation of the structural element modeling in an interactive mode. There are various options to the program. Surface definition allows the user to create a basic surface and edit the relevant data from the structural data base. Element mesh generation option lets the user generate the finite-element model. There are separate modules for element mesh geometry check, property definition for the various elements, restraint definition for the various degrees of freedom, external load definition, band width optimization when done manually, and writing a "neutral input file" for a structural

analysis program. This file will contain all the necessary data for the analysis program. Upon exit from GIRAFFE, the user submits a batch application job with the neutral input file as the input source. The batch program writes the stress and displacement data on a "neutral output" file. GIRAFFE has modules to read this file and to display deformations and the stresses. Boundary deformations, entire element deformations, stress contours, and individual element stresses may be displayed. The program also provides a "neutral element" library for the modeling purposes. Translation from the user-selected neutral element to the corresponding finite element of the specific application program which performs the solution phase will be made by that application program.

4. Computer Programs for Bridge Design

The design and analysis of bridge structures conventionally dealt with girder-slab type structures. In the present day, one finds bridges requiring curved units, slant-legged girders and support-type bridges, orthotropic or steel deck bridges, box girder sections, and cable-stayed structures. The materials used in these structures are mainly steel and concrete. The loads one considers in bridge design include the dead loads arising from the weight of the structure itself, the live loads due to the vehicles (calculated as moving quasistatic loads), dynamic effects due to a vehicle moving across the bridge (including impact effects), longitudinal forces arising from vehicles braking or accelerating on the bridge, wind loads and the possibility of wind-induced vibration especially in the cable-stayed bridges, stream-flow pressure on the piers, and floating ice pressure in some geographic regions. More recently, designers have taken to considering seismic loads, especially in regions such as California. The design specifications normally used throughout the bridge design community in the United States are those given in the American Association of State Highway Transportation (AASHTO) codes, Ref. [64].

a. Analysis Programs

(1) Finite-Element Programs in Bridge Structural Design

In the design of bridges, computer-aided analysis is used in two ways, the first being to develop and validate design code requirements. The second is in the design of the structures themselves, especially in the presence of an orthotropic deck, a curved girder, or a cable-stayed structure. In most of these cases, one could conceivably use a general-purpose finite-element displacement-method-based program such as STRUDL or SAP in a manual fully stressed design scheme. Special purpose finite elements that improve the economy of solution have been investigated for many types of bridge structures such as box girders, slabs, and grillages, slabs with eccentric beams, and shallow cellular structures. A good summary of such finite-element usage may be found in the paper by Davies, Sommervaille, and Zienkiewicz of the University of Swansea, Ref. [65].

(2) Curved Girder Bridge Analysis

The conventional design of highway bridges often saw the bridge located at the most convenient site, with the alignment of the highway system thus predetermined. This approach has now to be modified because of the complex highway interchange patterns where a structure is designed for a particular alignment. Thus, the structure may have to be curved. This requirement may also be brought on by difficult site conditions. The use of highway bridges with curved structures has now become more prevalent. The necessity for the bridge design information in this case lead to an experimental and theoretical research program at the University of Maryland, Ref. [66]. The study is mainly concerned with curved bridge systems including plate and box beam models. A principal feature of this study was the correlation of theory with experiments. Thus the applicability of analytical techniques in developing design information were to be verified. The program was carried out under the sponsorship of the Maryland State Roads Commission and the Federal Highway Administration. Out of this program came a large amount of design information and analytical procedures, a survey of which may be found in the Appendix. They pertain to curved orthotropic deck bridges, I girder and box girder bridges, and for bridges with a tubular girder. The theory used includes the Vlasov equations (Ref. [67]), the direct stiffness method, and special-purpose finite elements.

(3) Box Girder Bridge Analysis

In recent years, almost 60% of the concrete bridges (computed on the basis of deck area) in California have been multicell reinforced concrete box bridges. They have proved economical primarily in the 60-100 foot span ranges. For large spans, a post-tensioned concrete box girder structure is often used. Other types of box girder bridges including ones with individual thin-walled steel box girders are also in use. A review of analytical methods and computer programs developed at the University of California at Berkeley for the analysis of box girder bridges is presented in Ref. [68]. These solutions fall into two categories. The first is a direct stiffness harmonic analysis. The second consists of finite-element analysis programs that use special purpose elements. These procedures may be used to analyze multicell box girder bridges of straight, skewed, curved, or of arbitrary general geometry and under a general loading. A list of some of these computer programs and procedures may also be found in the Appendix.

b. Examples of Bridge Design Systems

The GAD System

Goble, Hsu, and Yeung, Ref. [69] of Case Western Reserve University, developed the GAD system of programs for the automated optimum design of those structures using mathematical programming techniques. GAD is an acronym for Girder Automated Design. GAD III performs the design of non-composite

continuous rolled beams. The simplest option will select the lightest rolled beam which meets all the requirements for the total length of the continuous beam. A second option will design a minimum cost continuous beam with cover plates. Only a single rolled-beam section is allowed. A third option allows both cover plates and changes in rolled-beam sections. GAD VI is a program for the minimum cost composite beam design. Both the beam and shear connectors are designed. The minimum cost design of a continuous reinforced concrete slab bridge is performed by the GAD IV program. A uniform slab is used and all the reinforcement is designed. The specification and related interim specifications of AASHTO, and the general practice, cost information and design standards of the OHIO-DOT are also used in the design. Optimization methods used are a one-dimensional random search and dynamic programming.

U.K. HECB Bridge Design Programs

A suite of programs widely used in England for the design of simply supported and continuous skew or curved slab bridge decks of solid or voided construction was made available in 1969 (Ref. [70]) by Great Britain Ministry of Transport. This package was prepared by R. Travers Morgan and Associates in cooperation with Zienkiewicz at the University College of Swansea. It uses plate and beam finite elements for the analysis of bending and membrane stresses in concrete slab bridge decks. This is a widely used package on account of the popularity of slab bridges. The shallow depth keeps the cost of adjacent embankments and road works to a minimum. Also, they may be of any plan shape and their supports randomly placed. The resulting ease in construction is reflected in the costs. Even thinner slabs can be used by prestressing the concrete.

Anderson and Douglas of R. Travers Morgan, [71], later modified the BECP package into a suite that can be used for the case of prestressed slabs. Their suite of programs can be used to prepare the mesh and generate the nodal loads for both dead loads and highway live loads. From data concerning prestressing forces, the position and shape of each cable, equivalent inplane and out of plane nodal loads are generated at each mesh point. Stresses are output for a specified combination of the applied load and the prestressing forces. The criteria for elastic design are the principal fibre stresses in the top and bottom of the slab considering both bending and membrane stresses. The system starts with a configuration and follows by mesh generation and a finite-element analysis. Inspecting the results for plate bending effects, prestressing is decided on and equivalent loads generated at each nodal pont. A reanalysis follows. Stresses developed are checked against an allowable tensile stress.

c. Integrated Bridge Design Systems

A bridge is to be designed to span a given distance and have a specified traffic flow capacity. The performance criteria to be met may include the number and width of traffic lanes, magnitude and distribution of all imposed loads, and the correct approach geometry. Constraints imposed may include items such as minimum clearances or code specifications such as the ones due to AASHTO. The measure of merit used may, for instance, be the cost of ownership and operation per year in terms of the vehicle tonnage per year.

A particular type of the bridge configuration such as the continuous truss bridge is then chosen. The structural layout would be done interactively. The preliminary evaluation would consider the effects of variation in principal design parameters such as pier locations, material usage, deck framing concepts, or maintenance related specifications. The design generated is then displayed by elevation, plan, and sections. Dimensions and position of all structural members may be tabulated. A bill of materials may be made and cost computed. Based on the above data, the measure of merit is computed for each design alternative.

Judging from our surveys, an integrated bridge design computer system of such capability does not exist at present. The full impact of computers in bridge design is yet to arrive.

5. Computer Programs for Building Design

It is conceivable that any general-purpose finite-element analysis program may be used for the analysis of building systems. In the interest of efficiency and economy, however, people have developed and used special-purpose programs for the analysis of building structures. We include here a sampling of a few such programs including some that have the capability for earthquake-related design. Designing buildings for both static and seismic loads is now more prevalent than before in the western United States. We may note here that although there exists some similarity in the analysis methods for vibration-related design in ships, what the building designer aims at in designing for seismic loads is to limit the maximum quantities of accelerations, displacements, or forces rather than avoid resonance. This is predominantly due to the relatively wider range of frequencies present in an earthquake.

a. Analysis Programs for Building Design

The examples of analysis programs that are listed here will be grouped as follows: the linear-elastic analysis programs and programs with the capability for the analysis of nonlinear or inelastic behavior.

(1) Linear-Elastic Analysis Programs for Buildings

TABS (Three-Dimensional Analysis of Building Systems, Ref. [72]) is a program designed to perform the linear structural analysis of frame and shear wall buildings subject to both static and earthquake loadings. The building is idealized by a system of independent frame and shear wall elements interconnected by rigid floor diaphragms. Beams and girders may be non-prismatic. Special panel elements allow discontinuous shear walls to be modelled. The static loads imposed on the structure may be combined with lateral earthquake input specified by an acceleration record or by an acclera-tion spectrum. Frames and shear walls are considered as substructures. The output of the program, in addition to forces and displacements, includes mode shapes and frequencies.

(2) Nonlinear Inelastic Analysis Programs

DRTABS, Ref. [73], developed by R. Guendelman and G. H. Powell at the University of California at Berkeley, determines the inelastic dynamic response of three-dimensional buildings of essentially arbitrary configurations due to ground motions. Static loads may be applied prior to dynamic loading, but the behavior under static load must be elastic. The building is idealized as a series of plane frames interconnected by horizontal rigid diaphragms with no enforcement of compatibility for vertical and rotational displacements at joints common to two or more frames. It is also not necessary for all frames to connect to all diaphragms. Five different elements capable of inelastic action are included in the program library including a truss, a beam column, an infill panel, a semi-rigid connection, and a beam with degrading stiffness. The earthquake time history is input. The output includes force envelopes and accumulated plastic strains and hinge rotations for each element.

b. Building Design Programs

For the structural design of building systems, the group of possible candidates again are structural design systems such as the ICES/STRUDL which are essentially written around large capacity general purpose, finite-element-based structural-analysis programs. We may note here that some versions of STRUDL have the design capability necessary for building structures, Ref. [74], and include code provisions such as those of AISC and ACI. STRUDL also has an automatic member selection capability.

The use of programs such as STRUDL to design medium-size building frames is often a relatively expensive proposition because of the overhead involved. In preliminary design, engineers often prefer to approximate their structures by a set of simpler two-dimensional structures. This approach has been used even on such monumental structures of the recent past such as the John Hancock Center, Ref. [75] and the World Trade Center, Ref. [76]. Once preliminary design is complete, a larger analysis program is used to check the calculations. This approach to building design lead to planar structural analysis programs which were incorporated into a suite of design programs. Such design suites often drew upon the AISC or ACI codes for the relevant design criteria.

Some Building Design Programs

A familiar program often used in building design is the member design program of the American Institute for Steel Construction (AISC), Ref. [77]. This program takes the member dimensions and member loadings as obtained from an analysis program and selects member sizes or member reinforcement to satisfy certain design codes. R.D. Anderson at the University of Colorado has developed

a building design program, Ref. [78], that combines a plane-frame structural analysis program and the AISC column-design program with interactive computer graphics to provide a complete system for the analysis and design of steel building frames. The program allows the user to control the interface between analysis and design phases to thus completely control the execution. Alternately, the computer will produce a fully-stressed design automatically. This program, CDFRAME, uses a building design related POL, thus facilitating user control.

A Building Design, Detailing and Scheduling System

RC-BUILDING/1 is a suite of computer programs written in the United Kingdom which performs the analysis and design of a reinforced concrete structure, Ref. [79]. The suite can design and detail structures consisting of beams, columns, and solid slabs. Schedule for bar fixing, bending, and weights are produced in a form suitable for the work-site in a format specified by a British Standard Code of Practice. RC-BUILDING/1 is available as a GENESYS subsystem.

C. STRUCTURAL DESIGN AND ANALYSIS COMPUTER PROGRAMS IN THE AEROSPACE INDUSTRY

The structural design process for a typical aerospace vehicle is a complex interdisciplinary effort. There are a large number of design details with their concommitant possibility of costly errors and lost design time. Hence, the interest in automating many aspects of this process. In this part of our survey, we consider design automation in four areas. The first is structural analysis. This refers to the determination of stresses or internal loads and deflections in a given structure under given loading conditions. Structural design entails, in addition to the above, the scope for resizing and reanalysis in the design variables considered. The process hopefully converges to a design that is best in the sense of some measure of merit. What is usually termed an "integrated design" system unifies the various interdisciplinary efforts necessary for the design of the aerospace vehicle into one whole. The last and fourth area that we have included for completeness is that of computer-aided design and manufacturing systems.

1. Structural Analysis Programs

The primary workhorse of the structural analyst today is the finite-element method based on a stiffness or displacement formulation. It has proved itself reliable and flexible for the highly redundant structures that one encounters in the aerospace and many other fields. The other matrix method of structural analysis, the force or flexibility method, is difficult to automate. As an example of a general purpose finite-element program developed by the aerospace industry, NASA's NASTRAN is described below. Many aerospace companies use comparable programs. For a survey of such analysis software in use in the aerospace industry, the interested reader is referred to Reference [80].

NASA's NASTRAN

NASTRAN (National Aeronautics and Space Administration Structural Analysis) Ref. [81], is a displacement-method-based finite-element program that was developed in the late 1960's under the sponsorship of NASA. It is a large-capacity general-purpose analysis program for elastic structural response. The program can handle most linear and some nonlinear systems. Static responses may be calculated due to different types of loads such as concentrated loads, distributed loads, thermal loads, or enforced deformations such as boundary displacements. The dynamic analysis capability of the program may be used to compute the response of the structure to steady-state harmonic excitation, transient loads or random excitation. The eigen values and eigen vectors characterizing the vibration frequencies may be computed. Elastic stability analysis is possible. The later versions of NASTRAN have both substructuring and fully stressed design capabilities.

The program has well-planned data structures and a good degree of modularity. It is user oriented and has a restart capability. The element library of NASTRAN has twelve elements, but each element may be used in place of several of the elements some other programs use. At the time it was developed, it represented a considerable increase in size and complexity over previous finite-element programs. The centralized project management that NASTRAN saw was a success. It is one of the more widely used and better documented finite-element programs available. It has good passive graphic capabilities that let the user check the input or visualize the deformed structure. Its maintenance and user documentation are centrally managed.

2. Structural Design Systems

In automating the structural design process, the procedure is to search systematically for the values of the design variables subject to a set of constraints, that result in a structure that is optimal when judged by some measure of merit, e.g., least weight. Mathematical programming is the general term used for such search techniques. Sometimes, instead of such optimization techniques, we may establish and use an optimality criterion such as a fully stressed design. This envisages a structure that carries a specified allowable stress under at least one of the many possible loading conditions. We will now go on to give two examples of structural design systems. Both of them primarily use optimality-criterion-based approaches.

Boeing's ATLAS System

The Boeing Atlas System (Ref. [82]) integrates geometry, aerodynamics, loads, structural analysis, and weights, and includes an executive routine controlling the sequence of analysis. The system relies on a displacement-based finite-element analysis method, including the capability for substructuring which is considered essential in the case of ships or aircraft. The design criteria used is the fully stressed design. The program has the capability for input update, regional resizing, selective execution of technical algorithms, restart, and convergence control. The convergence control is excercised and supported by the continuous recording and display of margins of safety and user-specified convergence criteria. This optimality-criterion-based design uses stress constraints defined by strength and buckling algorithms. Direct mathematical optimization of sub-parts where suitable is available and this capability is likely to be expanded in the future.

Israel Aircraft's ISSAS

The Israel Aircraft Industries are developing the ISSAS (Interactive Structural Sizing and Analysis System) which is a modular and highly flexible computerized system for the preliminary sizing and design of flight-vehicle

wing and fuselage structures, Ref. [83]. In this system, the analytical program modules may be interactively interfaced and sequence-controlled during the iterative design process through interactive graphics terminals. The system consists of six major analytical modules interfaced with six interactive computer-graphics modules. The analytical modules deal with aerodynamic analysis, weight properties, loads, structural analysis, automated design, eigen values and eigen vectors for the structure, and aero-elastic analysis. The graphics modules are concerned with the structural discretization for aerodynamic analysis, visualization of aerodynamic loads and flow parameters, the design, layout, and modification of preliminary lifting surface and fuselage structures, verification and modification of structural idealizations, and visualization of structural strength response parameters including mode shapes.

The system maintains a geometry data base containing the external surface definition of the entire aircraft in terms of its major assemblies and subassemblies. These can be interrogated and changed separately or in fused form. This geometry information may be easily integrated as input data to other analytic or graphic modules. The designer may define from the data base the principal lines of any part of the structure and carry out the placement of I beams, stringers, or panels. Design loads may be generated as a superposition of aerodynamic, inertia, and other loads. When needed, the load distribution may be discretized. The structure may be idealized into finite elements as a preliminary to carrying out a displacement-based finite-element analysis. There are two automatic design options, namely those of a fully-stressed design and a displacement-limited design.

3. Integrated Design Systems

An integrated design scheme is understood as one that combines all the various disciplines needed for the design, including structural design, of the vehicle in question under one system. Their main emphasis is often not only structural design. All other systems of an interdisciplinary nature of the object being designed are also under consideration. Integrated design schemes traditionally were configured to use data gathered from experience to automatically size and configure an aerospace vehicle. This semi-empirical approach fails for any major design departures, a situation that is not unfamiliar to the naval architect to whom this survey is addressed. Integrated design systems of today aim at incorporating more rational methods and theories. Two examples of large integrated design systems are given below.

NASA's IPAD

The Integrated Programs for Aerospace Vehicle Design (IPAD), Ref. [84], being developed by the Boeing Commercial Airplane Company for NASA, is a general-purpose interactive computing system intended to support engineering-

design processes. Typically, it would be used to support the mixture of development projects that a company may have at hand. The system serves the management and engineering staff at any and all stages of design, whether it be conceptual, preliminary, or final.

IPAD consists of four major types of software elements, as follows:

(a) Executive software that, together with interactive terminals, is used to control the various design processes and activities.

(b) Utility software that is used for routine information manipulation and display functions.

(c) Data management software that serves to store, track, protect, or retrieve very large quantities of information maintained on a variety of devices.

(d) Interface software that provides communications to computing systems outside of IPAD.

Open-ended libraries within the data bases contain the technology programs (analysis, optimization, etc.) utilized in the design processes by the various specialists and disciplines involved. Such programs are not part of IPAD, but must be provided by the company that acquires the IPAD system. These may, for example in the aircraft design context, consist of modules for aerodynamics, propulsion, structural design, performance evaluation, aero-elasticity, or economics related computations. The data base will include all project information and also archival information that serves as a technology base for company designs. Utilities provided include interactive graphics for design drafting and finite-element modelling, aids for program library maintenance, and text editing. IPAD should be able to support large design processes in the aerospace, civil engineering, shipbuilding, or automotive fields.

NASA's EDIN

A collection of computer-aided design software and hardware is being developed by NASA at its Johnson Space Center under the name EDIN (Engineering Design Integration System), Ref. [85]. It is meant for the evaluation of an aerospace vehicle preliminary design. The system, when complete, will consist of a set of demand access terminals of both the alphanumeric and static graphics types working off the main computer, a minicomputer based interactive graphical display system, and a library of independent computer programs. The independent program approach will allow any of the programs to be modified independent of the others. Independent of these programs will be a data base maintained by separate data processor programs. Each technology program may draw upon the data base. The specialists in any technology area can then work without regard to those in other areas involved, other than for the interfaces with the data base. The program library will contain technology-oriented

programs for estimating all major flight-vehicle characteristics such as aerodynamics, propulsion, mass properties, trajectory and mission analysis, steady-state aero-elasticity, flutter and stability, and control. There are special and general-purpose utility programs in the library for generating, analyzing, or controlling the flow of design data between the computer programs and/or the data base. The system also has programs for parameter optimization. Its structural design related capabilities include simplified aero-elastic loads and flutter analysis, structural sizing, and finite-element analysis.

4. Design and Manufacturing Systems

For completeness, we now give an example of a computer-aided design and manufacturing system developed by the McDonnell Aircraft Company, Ref. [86]. It consists of six basic graphics modules. They are concerned with Computer-Aided Design Drafting (CADD), Interactive Computer-Aided Design Evluation (ICADE), Computer-Aided Loft Lines (CALL), Computer Graphics Structural Analysis (CGSA), Graphic Numerical Control (GNC), and Computer-Aided Quality Assurance (CAQA). The CGSA module was developed to aid structural analysis and design. It is used in the determination of internal loads and stresses for structural sizing and the evaluation of structural integrity. It functions in conjunction with the drafting system, CADD. CGSA can prepare finite-element input data. The basic geometry needed for CGSA is obtained from loft data or drawings and input. The entire system of modules works with problem-oriented commands and uses extensive interactive graphics.

IV. SELECTION AND ASSESSMENT OF PROGRAMS SUITABLE FOR USE IN A PRELIMINARY SHIP STRUCTURAL DESIGN SYSTEM

The features of an ideal computer-aided structural design system are first described in general terms. They constitute a set of criteria by which available computer programs may be judged. The various elements of a preliminary ship structural design process are then outlined. The implementation of a computer-aided design system that suitably integrates the programs that perform the various design tasks is also discussed. This discussion is followed by a list of selected programs whose capabilities would make them representative candidates for inclusion into such an integrated preliminary ship structural design system.

A. FEATURES OF AN IDEAL COMPUTER-AIDED STRUCTURAL DESIGN SYSTEM

The preliminary structural design process may be envisaged as a number of cycles involving the optimization of a conceptual design that is required to meet and be judged by certain criteria. With this definition in mind, we now outline both the essential and the desirable features of a good preliminary structural design system. For our purposes, the term "system" is taken to include the program, the operating system, and the necessary peripheral equipment.

1. Essential Requirements of the System

a. Man-Machine Task Division

There are both creative and mechanical aspects to ship structural design, the latter being the major effort in terms of time spent, and of course, the less interesting of the two. The program system would allocate the design tasks to the machine and the designer, taking into account their particular capabilities and inherent limitations. The mechanical aspects of the design process would be automated to the fullest possible extent.

b. A Flexible Format of Operation for the Program

The program would be structured in such a way that its capabilities can be used by the designer in a way not anticipated by a rigid format operation. The program should be flexible enough so as to easily accommodate changes in design methods and procedures. It should be general enough to handle part or the whole of the structure, whether it be the midship section, a web frame, or the entire hull.

c. Interactive Capability

The creative aspects of the design process would call for certain decisions and innovations that are outside the machine's intelligence. Also, interjecting the impersonality of batch processing breaks with the human element, namely the designer, and makes the design process in many ways less interesting to him. Thus, a need for an interactive capability arises both from the iterative nature of the problem and from the more personal standpoint of the designer. It is far more gratifying to see the results of one's efforts instantaneously and continuously.

d. No Specialized Skills Needed

The program must be capable of being used by existing design office personnel. It must minimize the need for any special technical knowledge that is normally outside the realm of the structural designer. He must, of course, be able to maintain a "feel" for the correctness of the computer solution. For example, it might be difficult for the naval architect not familiar with Coon's surface theory to effectively visualize the derivatives one has to handle in order to represent a surface by bicubic patches.

e. Simplicity of Input and User Responses

For the necessary ease in communication with the machine, the input requirements must be simple, and minimal. Data entry when needed would be format free. A problem-oriented command language would initiate the required design tasks. The minimum amount of absolute input, together with the necessary data generation using that input, is required. Communicating through a light pen and keyboard is also a very desirable aspect of the system.

f. The Role of Graphics in the Program System

Once the necessary data has been entered, an active graphical display capability with a light pen and a keyboard is perhaps the best method of displaying and altering the proposed design. Both input verification and output review can be simplified by the use of graphics.

g. Optimization Capability

Finding an optimum solution to a design problem should be possible without having to evaluate every single design alternative. At least a semi-visual optimization capability with a provision for making rapid trade-off studies is necessary. A rigorous mathematical optimization procedure such as the exponential random search would, from the designer's point of view, only "desirable." He would prefer to see the effect of his changing some of the design variables, displayed as actual changes in the other design variables constituting the problem and in the final results. In the preliminary design of the structure, it is easy to understand and use an optimality criterion that takes into account the physical nature of the design problem. One such criterion might be a fully stressed design of "minimum" weight.

h. An Inherent Structural Analysis Capability

The preliminary structural design program would have its own structural analysis capability. It may, for instance, use a limited finite-element library. Overheads associated with a large-capacity general-analysis program may not be justifiable at the preliminary structural design stage. For the inherent analysis program, chores such as mesh generation would be automated to the greatest extent possible. Loads applied on the structure would be computed in a manner consistent with the intended complexity of the analyses.

2. Desirable Features of the System

a. A Well-Engineered Software Design

A well-designed program would be highly modular. This means that the various distinct tasks of the program may be performed independently of how the other tasks of the program are accomplished. We may think of a modular program as a sequence of user specified operations invoking clearly defined processors that operate on a common data base. Thus, we might have certain distinct entities for input/output and calculations tied together by an executive routine.

Modularity is an aspect of software engineering that is related to the overall program design. The local aspects of software design would be concerned with the development of a structured program. A program written in FORTRAN, for example, would be designed such that the static appearance of the program closely represents its dynamic flow. This would be achieved by the elimination of statements that result in jumps, such as "GO-TO's".

In a modular program then, the part of the program that communicates with the computer-operating system, i.e., the executive routine, would be separate from the analysis, layout, optimization, and other calculation and utility routines. These various routines communicate only with the executive routine and not with one another. The executive routine would maintain "absolutes" from certain modules to prevent a subsequent module from violating an absolute (e.g., where a structural redesign module would decrease the required payload capacity specified by the owner). Modularity would improve the ease with which the program may be expanded by the addition of new capabilities or altered by the addition or deletion of some of its routines.

Modularity and the use of structured programming together would improve the overall reliability of the software by the resultant ease in isolation of errors arising from program flow as distinct from those associated with the theory used or those arising out of improper data preparation.

b. Desirable Characteristics of the Graphical Display System

Ideally, the graphical display system would set up the data to be displayed in two stages. The first part would define a complete description of the plot as regards to all characteristics that are not dependent on the display device: for example, the grid and titles.

At the second stage, the intermediate results are transformed into commands particular to <u>any</u> given display station--for example, incremental pen movements for a drum plotter. The advantage is two fold: One may use the results of the first stage for any display device by choosing the appropriate post-processor. Also, errors in the first stage can be corrected without having to stop and restart a display device. Such restarts invariably result in wasted time and resources.

The software for the graphical display system may be as elaborate as one desires. Rotation of the display image for different perspective views is only one such possibility. The preliminary structural design program could have the capability to handle and display curved surfaces by Coon's patches or the B-spline technique.

c. The "Sketchpad" Approach

A combination of a light pen, a keyboard, and a relatively high-resolution graphics screen could conceivably replace pen and paper as the designer's tools for creating a design. Such complete replacement is not desirable in a discipline such as structural design where preliminary calculations and detailing are often a necessity.

d. Ease of Developing Alternate Designs

The data base would allow the designer to copy parts or whole of the design description in order to facilitate the development of alternate designs.

e. A Communication Link for the Design Team

The program would serve as an instant communication link between the various members of the design team. Each member would be familiar with all the changes incorporated by another member of the team since the design data base would be appropriately updated.

f. Inclusion of a Structural Data Bank

This data bank would hold pertinent information on certain items in the structure that may find a use in ship structures in general, such as rolled sections and steel plating. Structural criteria based on classification society rules can be also incorporated in the program for ready reference.

g. The Capability to Interface with a Larger Capacity Structural Analysis Program

The preliminary structural design program, as we pointed out earlier, would have its own inherent analysis capability in order to compute displacements or stresses in response to a set of applied loads. The ability to generate the data necessary to interface with a larger capacity finite-element program such as NASTRAN or SAP IV may be desirable in certain applications. The size and type of the problem is a consideration. We do not see the preliminary structural analysis capability as "large" in the number of degrees of freedom it can handle.

h. Application of Optimization Techniques

A system approach to the problem may be preferred with the capability for individual or local and whole or global optimization. In dealing with the complete structure then, one such plausible scheme may consist of the optimized selection of preliminary dimensions followed by a similar determination of spacing of main structural members. This in turn would be followed by the local optimization of the individual structures themselves, their overall outer dimensions having been determined by the two previous steps. The choice of the

optimization technique depends on the nature of the problem and the design variables involved. Different approaches may, for instance, be necessary for a continuous variable as opposed to a discrete one. For the preliminary selection of dimensions, an exponential random search where the randomness is reduced using the results of the previous trials may be adequate. More specialized techniques may be necessary for certain other aspects of the design. These may include one or more nonlinear programming techniques such as SUMT, mixed-integer programming, dynamic programming or alternately, a method based on an optimality criterion such as fully stressed minimum-weight design. One may also keep in mind that certain problems are not unimodal in nature and may thus possess more than one local optimum. So in applying a mathematical programming technique, the computer routines would let the user repeat the optimization procedure from different starting points as a practical method of checking the validity of a solution.

It should also be possible to change the measure of merit depending on the nature of the variables and the judgement of the design team. The design requirements themselves would be based on a variety of criteria arising from rule requirements or other analyses. Note that an optimized solution dependent on such rule requirements alone may not be optimal in a real sense given the traditional and conservative as opposed to a more rational nature of those rules.

i. Choice of the Source Language

The preliminary structural analysis program would presumably be written in a high level language except for certain small sections of the code that for either necessity or efficiency are written in a lower level language such as an assembly language. In the structural design community, FORTRAN is the most common and persistently used high level language, followed possibly by BASIC. These languages have certain limitations that need to be recognized. FORTRAN, for instance, is not the ideal choice for character data manipulation. In addition, more efficient use of data structures is possible in languages like PASCAL than it is in FORTRAN or BASIC. It may be noted here that there exist languages that let the user enter complete algebraic expressions, thus obviating the need, for instance, for coding in empirical expressions in an inflexible manner. An intelligent choice of the source language would lead to a simpler and more elegant code. One, of course, has to consider the availability of maintenance support and the universality of the language in the user community. If one has to use FORTRAN, its deficiencies would have to (and can be) compensated for by the program's own data handling modules.

j. Restart Capability for the Program

The question addressed to here is this: If failure were to occur at any stage of execution of the program, would the user have to start all over again from scratch, or can he restart the execution from an intermediate stage closer to the point of failure? This is another aspect that is strongly affected by the modularity of the program. Restart capability is a very desirable feature in any large program.

k. Portability and the Possibility of Operation on a Stand-Alone Minicomputer

The portability of the program is usually thought of as its ability to operate with a minimum of changes on different computers of comparable capability and characteristics. Machine independence for a program is desirable, but not entirely possible. This arises from the fact that the executive routine of a program has to invariably communicate with the operating system. Also, economy considerations require certain calculation-intensive parts of the program to be coded in a primitive language. These parts of the program should be distinct and well documented.

In these days of the minicomputer, it is desirable for the program to be portable enough to be able to operate on such a machine of "reasonable" size. The lack of availability of a sufficiently large core memory is a factor affecting the development and use of the program on a minicomputer. The difficulty may be overcome to an extent by techniques such as overlaying. Another consideration may be that in some cases, the lower level of precision in say a minicomputer with 16-bit words as compared to a larger computer with a 32 or 60-bit word length may lead to numerical difficulties such as those that arise in finite-element analysis. This difficulty may be overcome to a certain extent by recognizing this possibility and using variables of a higher precision. Written correctly, one may then expect the preliminary structural design program to be able to operate on a minicomputer system. This would bring the system within the reach of a much larger user community. The other alternative, of course, is to be able to use the program on a time-sharing basis on a larger computer installation.

l. Choice of Hardware for the Design Environment

The program system incorporates certain peripheral equipment and hardware such as display screens and magnetic tapes. This equipment chosen should be well suited to the design office environment. If magnetic tapes are to be used as a main storage medium, for example, it may be prudent to choose data cartridges over conventional reel tapes. The former do not require quite the same care with regard to temperature control and cleanliness as do the latter.

m. The Operating System Should be Able to Execute More than One Program at a Time

There is a trade-off in choosing an operating system for the computer installation such that it can execute more than one program more or less simultaneously. This consideration may or may not be important, depending on the size of the core memory available. The system that handles only one program at a time occupies less core memory, thus freeing more core for assignment otherwise. On the other hand, since the program system includes programs that execute at very different speeds--for instance, plotting is a very slow process compared to most computations--it may be definitely to the user's advantage to prefer the more versatile and larger operating system.

n. Interfacing with a More Complete Structural Design System (e.g., Detailing and Manufacturing)

It would be desirable to have built into the preliminary ship structural design program the capability to interface with computer-aided design detailing and construction programs such as the U.S. Navy CASDAC system.

B. ELEMENTS OF AN INTEGRATED DESIGN SYSTEM FOR PRELIMINARY SHIP STRUCTURAL DESIGN

The preliminary ship structural design process may be thought of as consisting of a sequence of tasks executed in an iterative fashion, Fig. 1. The aim of the process is to arrive at an optimum solution, namely, a structure that is the best attainable within recognized constraints, when measured by some yardstick, e.g., weight or cost. In this section, we describe the various elements of the design process and their integration into a system that would allow the designer to carry out the design tasks over and over again, in an arbitrary sequence, as many times as necessary.

1. Elements of the Preliminary Ship Structural Design Process

a. The computation of the local and global sea loads imposed by a design seaway on the ship hull structure.

b. The various application or problem-oriented programs that handle the numerous analysis tasks that constitute the hierarchy of steps necessary in the design process. (Fig. 1)

c. The design criteria and constraints that are used to judge the adequacy of structural strength and behavior.

d. The optimization aspect of the design process, characterized usually by the method of optimization employed and the measure of merit used.

We will now discuss these four aspects in more detail.

a. The Computation of Ship Motions and Sea Loads

There are two distinct levels of sophistication possible in computing the loads to be imposed on the structure. The lower level comprises the traditional methods of calculating the forces on a hull girder that is at rest on an assumed wave configuration. Bending and torsional loads may be computed; shear-flow computation may also be done. The characteristics of the wave configuration used would vary. Two possibilities, for example, are the old ABS design wave ($0.6L^{0.6}$) and the more recent ABS effective wave heights. The latter were derived out of a correlation with the more sophisticated strip-theory methods for ships in a random seaway. We may point out that this class of static methods cannot be used for cases where the seakeeping of the vessel may be of interest.

The second category of methods available are those based on the use of two-dimensional flow and strip-theory concepts. These methods are capable of computing motions, velocities, accelerations, and local and global loads on a

ship hull structure. The short- and long-term statistical prediction of ship motions and sea loads is also possible; so is the consideration of springing-induced forces and moments, which may be considerable for very long and shallow ships. The two-dimensional strip-theory methods have been successfully applied to ship and catamaran hull structures and beam-frame structures such as semi-submersibles. For very large bodies at sea, computations based on three-dimensional flow and diffraction theory are necessary. This is outside the realm of our consideration, which is limited to ships and ship-like vessels. The system that we have in mind should then be capable of both traditional static calculations and the more rational two-dimensional strip-theory computations. A load pre-processor would be used to transfer the computed loads to any generated structural idealization.

b. Analysis Programs for the Design Tasks

This section may be thought of as describing the various problem-oriented programs that handle the analysis of tasks that constitute preliminary ship structural design [40]. A typical hierarchy of such job steps necessary in the design process may be as follows (see Figure 1):

(1) The design of the midship section and longitudinal members: Assuming in the first instance an undistorted hull girder cross section; the principal ship dimensions, the position of the longitudinal bulkheads, and the position and dimensions of the longitudinal girders constitute the input.

(2) The design of transverse bulkheads: The general topology of the grillage that supports the bulkhead must be input. The structural interaction with the adjacent longitudinal members should be taken into account in designing the bulkhead.

(3) The grillage analysis of large portions of the ship: The idea is to study the effect of hull girder distortion by investigating the relative vertical displacements of the ship sides, longitudinal bulkheads, and girders which essentially support the transverse members. The stiffness properties of the main transverse frames must be known or assumed.

(4) The design of the transverse frames: The scantlings and dimensions of frame cross section, namely the height, web thickness, and flange areas of the girder are to be determined. Any local stiffening, for example tripping brackets or web stiffeners, have also to be sized.

(5) Finite-element analysis of selected portions of the hull: Although not strictly called "preliminary design", this phase is often necessary in order to investigate critical areas of the hull girder with greater accuracy and detail.

FIGURE 1

ELEMENTS OF A

COMPUTER-AIDED PRELIMINARY SHIP STRUCTURAL DESIGN SYSTEM

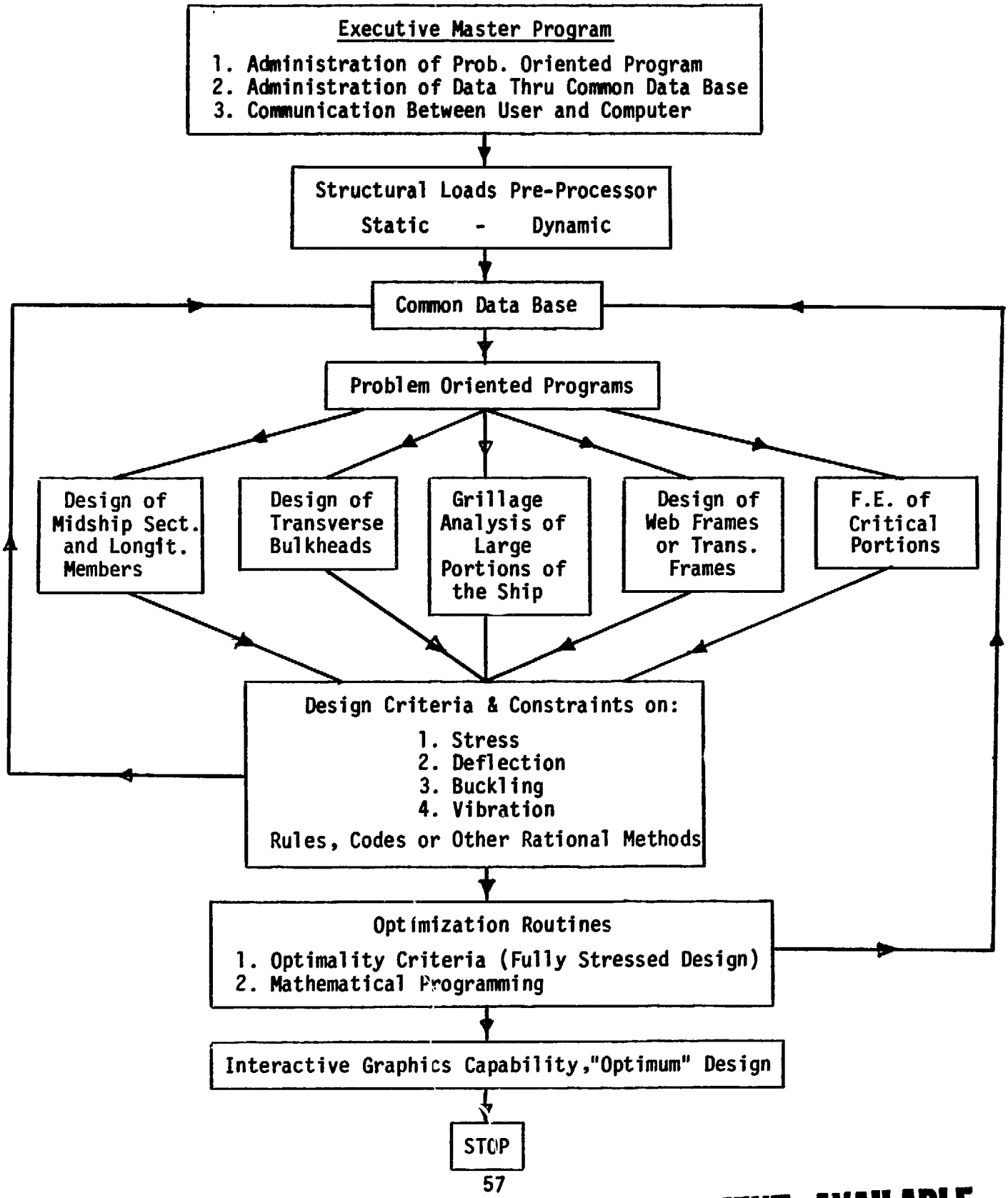

BEST DOCUMENT AVAILABLE

We may note that these typical design tasks may be implemented using theories appropriate to the particular task. The initial design of the midship section above may use simple-beam theory, assuming as it does, an undistorted hull girder. The design of transverse bulkheads can be done with elastic or plastic grillage theory. The grillage analysis of large portions of the ship would use elastic grillage theory. Transverse frames could possibly be designed using frame modelling judiciously, although there is some question as to whether this is indeed valid, given the proportions and size of the present-day tanker web frame. The last item, viz., the finite-element analysis of portions of the hull structure, could be carried out external to the preliminary ship structural design system, by a general-purpose finite-element-analysis program. The alternative to all this is to use a finite-element program at all the stages of the process, and this is certainly possible, and would in some ways, be more elegant. The use of theories that are simpler may thus be precluded. We may note here that more complex analyses techniques do not necessarily give better results and can not always be verified for accuracy except by simpler theories.

c. Design Criteria and Constraints

The adequacy of the structure to perform its mission is judged by criteria that have to be satisfied by an structure for it to be considered a feasible alternative design. These constraints generally involve either the strength, seakeeping, or habitability characteristics of the ship hull. The seakeeping and habitability constraints may include ship motions, accelerations, and the shipping of green water. Criteria related to structural adequacy include limiting stresses and deflections, and proper buckling and vibration constraints. Here we are concerned mainly with strength-related criteria. These may be decided upon by the use of rational requirements, codes or classification rules.

d. Optimization of the Hull Structure

Every design that fulfills the design criteria and constraints is a feasible design. An optimal design is one among the feasible designs that is more attractive than the others in some way, e.g., a design of minimum weight or cost. The quantity by which this optimality is judged is called the measure of merit. The two major classes of methods suitable for use in structural design are (1) mathematical programming-based ones and (2) those based on an optimality criteria such as a fully stressed design. Both require the analysis phase as a prerequisite (see Figure 1).

The implementation of the optimization phase itself may be done in two ways: (1) as part of the problem-oriented application program with optimization methods chosen for the particular problem the program is addressed to; or (2) as a separate entity consisting of a bank of optimization techniques. In the latter case, an interfacing strategy of some sort would assure access to the analysis results and suitable modifications to the structure based on those results.

2. Integration of the Design Elements into a System

The computer-aided design system for preliminary ship structural design would essentially integrate programs containing the above design elements in a manner that allows the designer to carry out the various iterative tasks efficiently. In doing this, three essential elements may be identified. They are (see Figure 1):

(a) The executive or master program of the system,

(b) The data base, off which all the processor programs work, and

(c) A graphics-based interactive capability.

We now describe these additional elements of the design system in more detail below.

a. The Design System Executive Routine

This is the master program of the system that performs the following functions:

(1) It controls the execution of the problem-oriented design program or programs in the correct sequence depending on the job or task the user selected.

(2) It provides all the data-base-management functions needed. It administers the transfer of data to and from the data base by the various design programs and by the user. The intercommunication between the programs themselves, or the programs and the user is administered by the executive routine. The routine also handles all communication between the computer operating system and the design software system.

(3) A command language definition and interpretation capability, when provided, is vested in the administrative routine; so is the capability for the addition or deletion of problem oriented programs that perform the design tasks.

(4) The executive routine maintains "absolutes" from certain modules to prevent a subsequent module from violating an absolute; see Page 50.

We note that although the preferred mode of operation is the interactive mode, it would be possible for the user, through the executive routine, to choose batch mode operation, provided that the design software itself is capable of working in either mode.

b. The Common Data Base

The traditional concept of the computer program as a complete, separate entity is now giving way to a new approach where data bases take on control, with the individual programs considered as processors operating on that data base. The data base is thus the single most important entity that must support all the pertinent design activities of the program system.

In a physical sense, the data base is usually a collection of files resident in some secondary storage device and accessible in some fashion to the user. In its broadest sense, a data base consists of files of two kinds. They are:

(1) Program files that contain either complete programs or components that must be assembled by user command or otherwise before it can execute.

(2) Data files of three types: those that contain material for common reference use by several programs; those that contain global information shared by several programs, and pertinent to the current status of the projects; and thirdly, scratch or buffer files containing temporary information shared by programs or segments working on a given task.

For our purposes, the term data base will be used in a restricted sense and will connote only data files. The data base in our case will hold information on the following:

(1) The internal structural arrangement and layout (the digital structural model) in two levels: the first is simply the general topology (external geometry) of the structures and the spatial extent of the various members; and the second level consists of the actual scantlings of the structural members.

(2) A structural data bank that contains information on structural details and sections that can be used from design to design. Such information includes section geometric properties, weight per foot, etc.

(3) The data base is used by the executive routine for the storage and transfer of data between the processors or any other location such as the input/output devices. It contains all intermediate calculations and information relevant to the design, such as the finite-element mesh generated, the loads computed, the response quantities determined, the weight estimates, etc.

The data base is continuously refreshed in the sense that as the design proceeds, the design data base is updated. Information pertinent to the old cycles or alternate designs could of course be retained in the data base for any anticipated purpose, (e.g., for reference by the executive routine for "absolutes", see Page 50).

c. A Graphics Based Interactive Capability

Many aspects of the preliminary design process are best carried out in an interactive mode, with the largest possible use of graphics capability, both active and passive. A wide range of uses for such a capability may be anticipated as is evident from the examples given below.

(1) The various analytical programs in the system may be interfaced and sequence controlled during the iterative design process through interactive computer-graphics programs. The analytical programs may for instance deal with load computation, structural analysis, and optimization. The interactive graphics modules in the system may deal with structural discretization, visualization of loads and response parameters, the design, layout and modification of the hull structure, and the verification and modification of structural idealizations.

(2) The generation of structural models, including meshes for the analysis programs, and their subsequent verification and editing, may be simplified by the use of interactive graphics. The generation of the models would be done in an efficient manner, taking the repetitive nature of parts of the structure into account.

(3) The interpretation of the output generated by the program system, e.g., stress or displacement contours, may be expedited by the use of the graphics capability.

The concepts of the integration of the various design elements into a system for preliminary ship structural design are illustrated in Figures 1 and 2. Figure 1 shows the major elements of an assumed iterative design scheme integrated into a system. The various problem-oriented analysis programs work in conjunction with design criteria and optimization routines. The interactive graphics capability is used to interface and sequence these programs and, in general, monitor the path and progress of the design process. Note that although the various analyses, criteria, and optimization aspects are shown separately, they may, for each design element, be part of one application program; their separate deployment is of course possible. It is also possible to replace all the analysis routines that presumably use simpler and particular theory, by a general finite-element-analysis capability. A detailed box diagram for a system using this idea and an optimality criterion is shown in Figure 2, and is described in detail in the following subsection.

An Interactive Computer Graphics System for the Preliminary Design of Ships

The contemplated system is based on the repeated application of analytical program modules, which are interactively interfaced and sequence controlled during the iterative design process by the use of design-oriented graphics software modules. It is intended that the entire process be initiated and controlled via a low-cost interactive graphics terminal driven by a minicomputer. The program system may be thought of as consisting of four analytical modules, LOADS, WEIGHTS, SAFE, and EIGEN; four interactive Computer Graphics (ICG) modules, SAM, SPP, MODIS, and SLADE; and the data base and the executive routine. (See Figure 2 for a box diagram of the system.) The various components of the system are described below.

(1) SLADE: Structural Layout and Design. This is an ICG module which aids the structural designer in designing and laying out the hull structure given the hull geometry. The geometry of the part of the hull in question is

FIGURE 2

A BOX DIAGRAM FOR A CONCEPTUAL

PRELIMINARY SHIP STRUCTURAL DESIGN SYSTEM

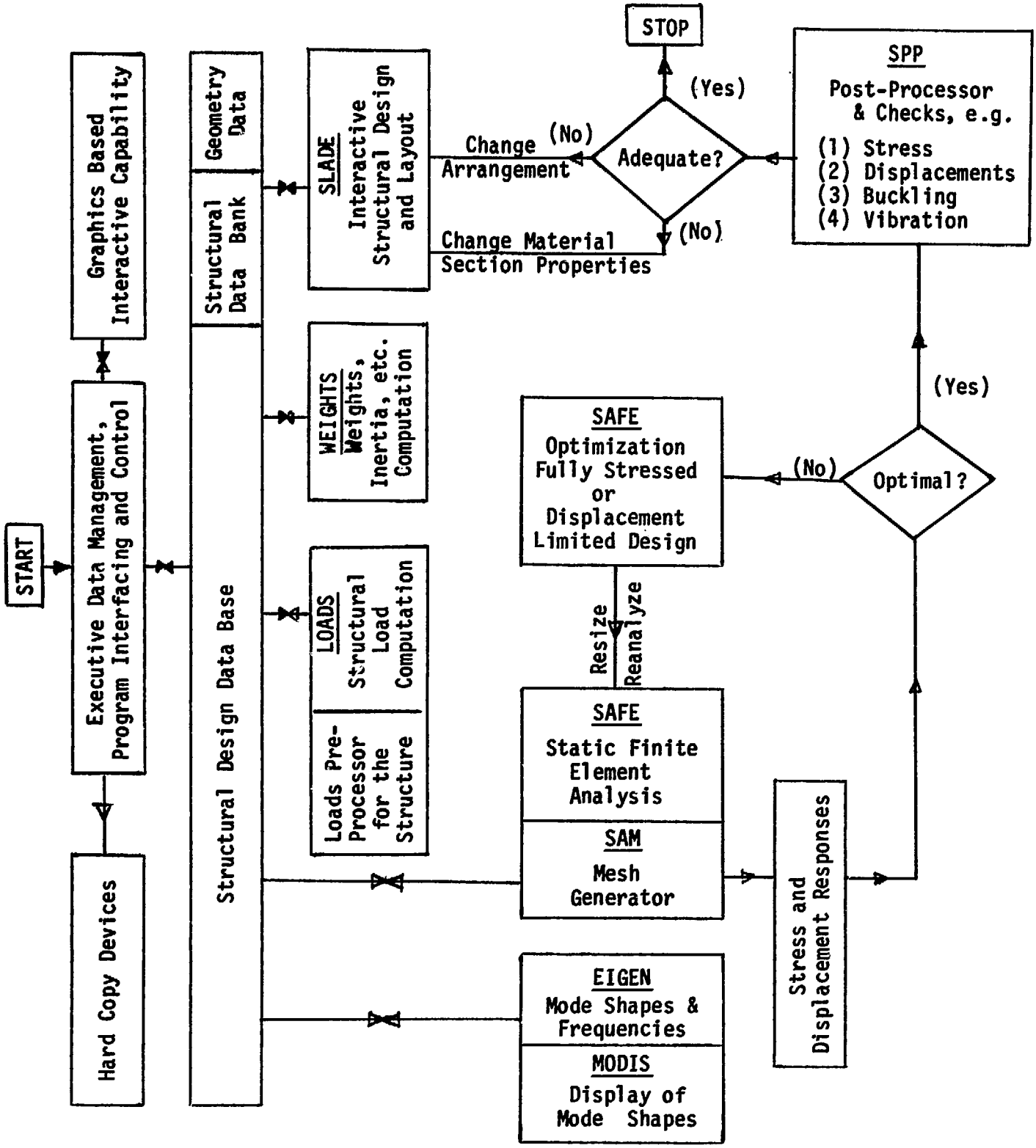

BEST DOCUMENT AVAILABLE

extracted and displayed. Reference lines along which structural elements may be defined are laid out. Either separately or by appropriate generation, the designer then defines the structural elements. Two distinct models then exist: one consisting of the framework of principal lines, and the structural layout consisting of the defined design elements. The designer may at any time display and edit either model.

(2) WEIGHTS: This module will consist of routines that can: (a) given results of the SLADE module, compute the total weight, centers of gravity and moments of inertia of the structure; and (b) given the SAFE finite-element idealization, compute a diagonal (lumped) mass matrix for all or a selected number of structural degrees of freedom.

(3) SAM: Structural Analysis Modelling. This is an ICG module that helps generate a finite-element mesh for structural analysis purposes. Node positions and element topology may be generated by automatic or interactive options, the latter being used where no recognizable pattern is evident. Node numbering and coordinate assignment will be done automatically. The idealized structure may at any stage be displayed and interactively edited.

(4) LOADS: This module will generate the design loads for the ship using a static wave approach or from strip theory calculations. Design loads may also be specified. The loads module will use data written on the master data base by the WEIGHTS module, particulars of hull form, and the SAFE module. The loads module output will consist of: (a) the load distribution for the hull surface, optionally represented as discrete forces acting at structural grid points; (b) the shear force and bending moment diagrams for the ship hull girder; and (c) envelopes of the critical load cases that were analyzed.

(5) SAFE: Structural Analysis by Finite Elements and Automated Design. The analysis module is based on the displacement method, featuring advanced element technology in conjunction with efficient solution schemes. The program will have dynamic storage allocation, and have its input compatible with a large finite-element program such as NASTRAN. Two automated design modules will be available, one for the Fully Stressed Design (FSD) and the other for a Displacement-Limited Design (DLD). The major resizing step is usually determined by the first FSD cycle. The SPP module may then be used to display the results and, based upon them, the structural designer may introduce modifications or allow the FSD routine to continue. The SPP routine may be used to display the results after each resizing. If displacement constraints are placed on the structure, and they are being violated, the designer may re-route the process via the DLD routine that alters the structure's stiffness.

(6) SPP: Structural Post-Processing. This is an ICG module that displays the structural response parameters from the SAFE analysis. Stress or force components in selected sets of elements in the structure may be displayed. Stress

contours may be plotted. Structural deformations may be displayed. The load data extracted from the data written by LOADS may be viewed, superposed on the structural idealization. This routine could also check whether the design meets certain absolutes, such as the payload capacity specified by the owner.

(7) EIGEN: Frequencies and mode shapes. This module computes the natural frequencies and mode shapes of a structure by an efficient scheme whereby the lower modes of a structure with many degrees of freedom may be accurately extracted. The stiffness and mass properties needed may be extracted from data written by SAFE and WEIGHTS.

(8) MODIS: The mode shape display module. This is an ICG module which displays the natural vibration modes of a given structure as computed by EIGEN. Each requested mode shape is displayed by superimposing the zero-mode lines and relative amplitude vectors over the grid points of the undeformed structure.

(9) THE DATA BASE for the system consists of (i) the STRUCTURAL DESIGN DATA BASE that holds the relevant information used or generated by the various programs in the system, (ii) the GEOMETRY DATA BASE, and (iii) the STRUCTURAL DATA BANK. The last two are described below.

(i) GEOMETRY DATA BASE: This contains the external surface definition of the entire ship hull, in terms of its major assemblies and subassemblies such as decks, the forward and aft portions, the middle portion, and so on. The data may be presented to the designer either in alphanumeric form or as a picture. He will be able to specify cutting planes which define the hull geometry he needs to look at.

(ii) STRUCTURAL DATA BANK: This consists of structural design elements and other items that are invariant from design to design, such as rolled sections and their properties, etc. The designer would point a cursor on the graphics display to the grid line where the structural element is to be laid out, and then key in the type and specifications of the element.

(10) THE EXECUTIVE ROUTINE: This provides the data management, and program interfacing and sequencing capabilities for the program system. It serves to join the designer and the program into a working partnership.

(11) INTERACTIVE GRAPHICS TERMINALS: These terminals could be of two types, the first being the DVST (Direct View Storage Tube) display terminals such as the Tektronix 4010 and 4014 models. DVSTs may be used together with a cursor or data tablet and the appropriate software. The main disadvantage of these terminals arises from their non-refreshable nature of the CRT. The picture has to be repainted each time an item is modified or deleted. When

directly connected to a stand-alone fully committed minicomputer and operated at their capacity role of 9600 baud, these terminals would probably present a satisfactory and cost-effective solution to most of the designer's needs. Repainting busy and complicated pictures at the lower rates of operation, e.g., at 1200 baud that is typical of voice-grade telephone lines, could be time consuming and frustrating. The advantage of the DVST terminals is their relatively low cost. The alternative is a refreshed CRT terminal such as the Imlac PDS-4 graphical display system. This is a refreshed CRT display with a wired-in microprocessor, with interaction by means of a keyboard and light pen. The designer would use it like a teletype. He may at any time transfer a picture file to the local microprocessor memory and edit or otherwise manipulate it. Either kind of hardware configuration would be supported by software that would let the designer rotate, translate, zoom, or window the picture.

(12) HARD COPY DEVICES: Permanent records of alphanumeric and graphic information may be obtained using an on-line hard copy device when direct view storage tubes (DVST) that are non-refreshable are used. Off-line printers and plotters would also be used for obtaining hard copies of data and results.

d. Examples of Selected Computer Programs

Table I given on the following pages lists computer programs selected as being typical of the various aspects of preliminary ship structural design. The reader is referred to Chapter III for a more detailed description of the programs listed here.

TABLE I

SELECTED PROGRAMS

NOTE: Most of these programs are described in the text.

NAME	REFERENCE	DESCRIPTION
		LOADS ON SHIPS
		1. QUASI STATIC COMPUTATION
SHCP	NAVSEC [17]	LONGITUDINAL SHEAR & BENDING MOMENT.
NV260	DnV [28]	LONGITUDINAL SHEAR & BENDING MOMENT.
		HORIZONTAL & TORSIONAL LOAD COMPUTATION PROGRAMS NOT LOCATED.
		2. SHIP MOTIONS & SEA LOADS
WAVE LOADS ON SHIPS PACKAGE	DnV [28]	MOTION, LOAD & PRESSURE RAO. (NSRDC SHIP MOTIONS & SEA LOADS PROGRAM).
		PROGRAM TO TRANSFER RAO FOR USE BY SEASAM-69 FINITE-ELEMENT SYSTEM.
		RESPONSE COMPUTATION TO PIERSON-MOSKOWITZ TYPE SPECTRA
SHIPMOTION	ABS [217]	MOTION, LOAD, & PRESSURE RAO. (SCORES SHIP-MOTIONS & SEA LOADS PROGRAM.)
		PROGRAM TO TRANSFER RAO FOR USE BY THE DAISY FINITE-ELEMENT SYSTEM.
		RESPONSE COMPUTATION TO THEORETICAL OR MEASURED WAVE DATA.
		GENERAL PURPOSE FINITE ELEMENT SOFTWARE
DAISY	ABS [108]	LINEAR ELASTIC, SUBSTRUCTURE. PRE- AND POST-PROCESSING.
GIFTS	U.ARIZONA [27]	LINEAR ELASTIC. MULTILEVEL SUPERELEMENT INTERACTIVE DATA ENTRY, EDITING. DIGITIZER. MINI-COMPUTER. GRAPHICS.
SESAM-69	DnV [104]	MOSTLY LINEAR ELASTIC. MULTILEVEL SUPERELEMENT. PRE- & POST-PROCESSING.
NASTRAN	NASA [81]	MOSTLY LINEAR ELASTIC. MULTILEVEL SUPERELEMENT. FULLY STRESSED DESIGN. PRE- & POST-PROCESSING.
SAP-SYSTEM	U.C. BERKELEY [59,60,61]	LINEAR, NONLINEAR & DYNAMIC ANALYSES. SEASAP FOR LOADS ON OFFSHORE STRUCTURES. SOME VERSIONS HAVE SUBSTRUCTURE CAPABILITIES. PRE- & POST-PROCESSING, DEVELOPED AT UNIVERSITY OF MICHIGAN.

BEST DOCUMENT AVAILABLE

SELECTED PROGRAMS

NAME	REFERENCE	DESCRIPTION
		OPTIMIZATION SOFTWARE
SHIPOPT	ABS [275]	SHIP STRUCTURE OPTIMIZATION SOFTWARE. SEQUENTIAL LINEAR PROGRAMMING USING SUCCESSIVE LINEARIZATION OF NONLINEAR CONSTRAINTS. USER SUPPLIED NONLINEAR MEASURE OF MERIT. FE ANALYSIS ULTIMATE STRENGTH ANALYSIS TO GENERATE CONSTRAINTS BASED ON A SET OF 'LIMIT STATES" OF VARYING DEGREES OF SERIOUSNESS.
OSW	TU BERLIN [42]	INTERACTIVE OPTIMAL DESIGNS. APPLICATION & OPTIMIZATION STRATEGY SEPARATE. SUMT & TANGENT SEARCH.
OPTECH	ICES [165]	OPTIMIZATION SOFTWARE. LINEAR PROGRAMING DIRECT SEARCH FOR NONLINEAR PROGRAMMING (CONSTRAINED & UNCONSTRAINED) AND ALL INTEGER PROGRAMMING.
SUMT	MIT [161]	OPTIMIZATION USING THE SEQUENTIAL UNCONSTRAINED MINIMIZATION TECHNIQUE.
		GRAPHICS FOR STRUCTURAL DESIGN
GIFTS	U.ARIZONA [27]	FEM INTERACTIVE GRAPHICS MODE. GENERATION, EDITING & POST-PROCESSING DIGITIZER.
MOVIE. ARIZONA	BRIGHAM YOUNG U [213]	COMPUTER GRAPHICS SYSTEM FOR THE DISPLAY & MANIPULATION OF DATA. LINE DRAWING & CONTINUOUS TONE DISPLAY. MINICOMPUTER.
GIRAFFEE	CONTROL DATA [63]	INTERACTIVE GRAPHICS. MESH GENERATION, EDITING, DISPLAY OF ANALYSIS RESULTS FOR 3-D STRUCTURES.
LR521	LLOYDS [125]	INTERACTIVE GRAPHICS DATA GENERATION & EDITING. GENERATE REPETITIVE GEOMETRIES EFFICIENTLY FOR ANALYSIS.
TOPOLOGY	ICES [165]	AUTOMATED GENERATION OF STRUCTURAL TOPOLOGY FOR FINITE ELEMENT ANALYSIS, STRUDL FORMAT, COMPLEX STRUCTURES BY COMBINING SIMPLER REPETITIVE GEOMETRIES.
		DESIGN ENVIRONMENT
BOSS	TU. TRONDHEIM [105]	DATA BASE MANAGEMENT, PROGRAM EXECUTION & INTERCOMMUNICATION.
COMRADE	U.S. NAVY [18]	DATA BASE MANAGEMENT, PROGRAM EXECUTION & INTERCOMMUNICATION. COMMAND DEFINITION & INTERPRETATION CAPABILITY.

BEST DOCUMENT AVAILABLE

SELECTED PROGRAMS

NAME	REFERENCE	DESCRIPTION
		PACKAGES APPLICABLE TO STRUCTURAL DESIGN
HULDA	DnV [31]	HULL DESIGN & ANALYSIS PACKAGE. BOTH RULE & DIRECT CALCULATION. - HULL GEOMETRY DEFINITION - SYNTHESIZE SECTION USING RULES - CHECK RULE COMPLIANCE - SHIP MOTION & SEA LOADS - TRADITIONAL LONGL. STRENGTH - 2D SHEAR FLOW & STRESS - 3D FRAME ANALYSIS - 3D FRAME MIN. WEIGHT OPTIMIZATION - MAX. DEADWEIGHT BULKHEAD SPACING FOR TANKERS. SUMT. PROGRAMS WORK OFF A COMMON DATA BASE.
LR. PASS	LLOYDS [30,123,124]	PLAN APPRAISAL SYSTEM. LOADS, STRUCTURAL CAPABILITY, CRITERIA, FACTORS OF SAFETY. RULE & DIRECT CALCULATION.
- SHIPS - SEAS - SWASH - SAFE		- HULL PRIMARY STRENGTH DIRECT CALCULATION - SEA LOADS INCLUDING SLAMMING - SLOSHING WAVE ANALYSIS IN HOLDS - SHIP ANALYSIS BY FINITE ELEMENTS (NASTRAN). WILL SOON HAVE A FSD CAPABILITY
INDETS	TU. TRONDHEIM [40,41]	INTEGRATED DESIGN OF TANKER STRUCTURES
- LANOPT		OPTIMUM DESIGN OF MIDSHIP SECTION. SUMT. WEIGHT OR COST MINIMIZATION.
- KOROPT		DESIGN OF VERTICALLY CORRUG. TRANSVERSE BULKHEADS. SUMT. WEIGHT OR COST MINIMIZATION.
- RAMOPT		DESIGN AND ANALYSIS OF STATICALLY INDETERMINATE FRAMES. SUMT. WEIGHT MINIMIZATION.
- GIROPT		OPTIMAL STEEL GIRDER DESIGN. MIXED INTEGR. PROGRAM WEIGHT OR COST MINIMIZ.
BOSS		EXECUTIVE SYSTEM FOR INDETS.

BEST DOCUMENT AVAILABLE

TABLE I (CONCLUDED)

SELECTED PROGRAMS

NAME	REFERENCE	DESCRIPTION
		SYSTEMS FROM AIRCRAFT INDUSTRY
ATLAS	BOEING [82]	STRUCTURAL DESIGN SYSTEM. FULLY STRESSED DESIGN.
ISSAS	ISRAEL AIRCRAFT [83]	STRUCTURAL DESIGN SYSTEM. FULLY STRESSED OR DISPL. LIMITED DESIGN.
		OPTIMAL DESIGN OF THE MIDSHIP SECTION
---	MIT [36]	PARAMETRIC VARIATION FOR MIDSHIP SECTION SYNTHESIS. CALCULATES WEIGHT & COST.
SSDP	NSRDC [39]	MINIMUM WT MIDSHIP SECTION SYNTHESIS. U.S.NAVY CRITERIA. MATH. OPTIMIZATION.
LANOPT (INDETS)	TU. TRONDHEIM [40]	OPTIMUM DESIGN OF TANKER MIDSHIP SECTION. SUMT. WEIGHT OR COST MINIMIZATION. DnV RULE CRITERIA.

BEST DOCUMENT AVAILABLE

V. ASSESSMENT OF POTENTIAL BENEFITS AND CONCLUSIONS AND RECOMMENDATIONS

A. ASSESSMENT OF POTENTIAL TECHNICAL AND ECONOMIC BENEFITS OF A COMPUTER-AIDED SHIP STRUCTURAL DESIGN SYSTEM

The application of computer technology to structural design would serve to improve design efficiency and reduce costs. The motivation for using computers in structural design stems from the iterative nature of the design process and the complexity of a structure that necessitates relatively sophisticated analyses even in the preliminary design stages if costly mistakes are to be avoided. The need for such analyses is more acute in cases where relatively meager design data exist because of limited experience with certain types of structures. Conservative design margins are becoming less attractive as the costs implied by them, both in the weight of the structure and the revenue lost due to the resulting reduced payload, are becoming increasingly important.

It is fair to say that the greatest potential for savings through careful design occurs in the initial stages of the design process. This is precisely the part of the process where more often than not, designers are forced to complete their preliminary design within a tight time schedule, whether it be because of a competitive bidding situation or as a prerequisite to production. It is easy to see how the design attainable in a given period of time through a computer-aided process may be far better, from both the designer's and the user's point of view, than one obtained by traditional manual methods.

Advantages of a Computer-Aided Preliminary Ship Structural Design System

Structural design is a process by which a configuration of the structure is evolved to meet certain functional requirements. The process of transforming the functional requirements to the preliminary design has traditionally involved successive cycles of iteration rather than the direct closed form solution, the latter prospect being all but impossible except for the simplest of structures. The design process involves the evaluation of various alternate prospective designs on the basis of their cost and performance implications. In this process, the computer has certain distinct advantages.

(1) It is ideally suited for iterative tasks. By releasing the designer from the many purely mechanical chores, it allows him to concentrate on the more creative aspects of the design.

(2) It allows the designer to develop and gauge more design alternatives in a shorter time than would otherwise be possible. Better decision making regarding design tradeoffs is also made possible. These capabilities allow the definition of a more economical and better solution to the design problem in a shorter time. This can be a distinct advantage in the pre-contract stage where one may often be strapped for time.

(3) The design tasks can be performed to an adequate depth in the preliminary design stages. Thus, later changes that invariably result in cost overruns may be avoided.

(4) That the advent of the computer has brought with it an increased sophistication into the design process cannot be disputed. The computer has motivated the development of many techniques that effectively use its inherent nature and capabilities. A case in point may be the linear-elastic analysis based on the finite-element method which is now being universally applied to complex structures. The other is the increased use of optimization methods, a prospect that was made possible by the computer. The anticipated development of faster and more efficient machines together with the development of better solution algorithms will make possible the analysis and optimization of increasingly complex structures.

(5) Advances in graphics hardware have proved to be of immense use to the designer. The vast amount of input preparation and verification time needed in a typical analysis task which, when done manually, accounts for a major part of the total project time, can now be drastically reduced. The job itself can be done more accurately. Graphics help the designer in interpreting the volumes of data the design process produces. An improved understanding of the behavior of the problem at hand thus made possible works to the designer's advantage. The insight gained may result in better design criteria.

(6) Certain subjective aspects of computer-aided procedures that we might mention are its speed, reliability, consistency, and the fact that in a context, it makes no mistakes. Changes in design parameters can be made easily, their results being felt more comprehensively through the entire structure than is possible in a manual process. A better design precision and a reduction in the design inconsistencies is the direct result.

It may be noted that in the past decade, the cost of computer hardware has continuously seen a downward trend, while the performance of the machines has been increasingly better. The cost of engineering manpower is getting higher. The use of a computer-aided system for the preliminary structural design of ships will result in reduced manpower usage and project flow time. It will lead to a structure with a better distribution of material and a more uniform margin of safety. The optimization of the structure will effect material savings. It will ease the work of the designer and also contribute to a better design by better methods. All these, ultimately, will be reflected in both the all around costs and the vitality of the design process.

In assessing the technical and economical benefits of a computer-aided design system, one would compare the value of the accruing benefits to their cost. This would require an evaluation of who would use the system, how often it would be used, what it would cost to develop, maintain and apply, and what the resulting economic savings would be.

B. SPECIFIC RESULTS OF THE SURVEY

We discussed the present day trends in computer-aided structural design in general terms under Chapter II. It is appropriate here to give some specific results drawn from the marine part of our survey, to illustrate the trends we previously discussed.

1. The most used structural analysis technique is the displacement-based, linear-elastic finite-element method. Some examples of the programs in use and their users are: NASTRAN (U.S. Navy, Lloyds Register of Shipping), DAISY (American Bureau of Shipping), SESAM-69 (Det norske Veritas), and GIFTS (U.S. Coast Guard). Automated data generation and post-processors to review the results are available for use with most of these programs. In particular, the GIFTS system allows for interactive model generation and editing. All the programs named, including the latest versions of COSMIC NASTRAN, have a multilevel super element capability.

2. Methods of mathematical programming have been used for the preliminary structural design of ships, primarily at the Norwegian Institute of Technology. A new optimization program which uses mathematical programming and is formulated on the premises of ultimate strength is currently being tested and implemented at the American Bureau of Shipping. This program determines the structural scantlings by repeated optimization using a cost and weight merit function and subsequent finite-element analysis to determine the current redesign's structural adequacy. An optimality criterion (the fully stressed design) based structural design capability will soon be available under Lloyds Register's LR PASS system using NASTRAN.

3. Minicomputers have been used in ship analyses and design, for the ship's arrangements and layout (U.S. Navy's COGAP), for ship concept design (U.K. Navy's Forward Design System), and for structural analysis (GIFTS at the U.S. Coast Guard).

4. Integrated systems for the preliminary design of ship structures include HULDA (DnV) and programs under the BOSS System (Norway). There are to our knowledge, no structural design systems at present in use in the marine field that have quite the capability and elegance of some of their counterparts in the aerospace field (Boeing's ATLAS, for example).

5. Design environments that aim to integrate the man and the machine (U.S. Navy's COMRADE, Norwegian Institute of Technology's BOSS) are available in the marine field.

6. The level of software engineering in use has been difficult to judge. One aspect, modularity of design, is claimed by almost any program developer. As for software coordination efforts, they are not on the scale they should be. There is no large software development coordination. Some of the U.S. Navy developed programs are distributed through NASA's COSMIC. The Navy's Office of Naval Research has for its use, the STORE (Structures Oriented Exchange) system. The Maritime Research Information Service (MRIS) disseminates literature abstracts on marine related software.

It is evident that full capability of the digital computer has not yet been completely exploited in the case of the preliminary structural design of ships. We now go on to survey computer applications to structural design in both the marine and the non-marine areas.

C. GENERAL CONCLUSIONS

The many analysis, design and manufacturing oriented software that have been surveyed are summarized in the form of a long table in the Appendix. It is fair to state that by and large, most of the existing programs surveyed were more analysis than design oriented in intent. Using the survey results, and our own conception of what is expected of an ideal computer-aided preliminary ship structural design system, the following conclusions are drawn and recommendations made.

1. The general purpose structural analysis programs used in both the marine and non-marine areas today are based on the linear finite-element displacement method. There is a proliferation of these programs and most of them are very large and are not directly usable for automated design. A few analysis programs do, at present, have a fully stressed design capability. Such very large programs are better suited for design checks rather than for preliminary structural design. Integrating a ship-geometry definition and load-computation capability with what is already a very large and extensive program may create an unmanageable and very expensive system.

2. There are many production-oriented design and manufacturing systems available, primarily in the marine and aerospace industries. Although some of these manufacturing systems may in fact be interfaced or integrated with 'design' systems that perform traditional geometry and form related calculations, they do not incorporate preliminary structural design functions. Such a large-scale integration does not seem feasible at this point in time. Thus, there is an upper limit to the degree of integration attainable.

3. The design systems available in civil engineering for buildings have been developed as very specialized programs that generally tend to idealize the structure by simple configurations such as planar frames. These systems are also seen to draw heavily on codes such as the AISC or ACI for design criteria. Quite a few of them deal exclusively with reinforced concrete structures. The design programs that tend to use the finite-element method instead of the planar frames are also often specialized in that they use specifically developed finite elements. The capability found in some of the programs aimed at seismic design is quite different, in intent and the criteria used, from that for ship structural design. As potential candidates for the preliminary structural design of ships, the building design programs are far from suitable.

4. The bridge design systems available today are deemed unsuitable for use in preliminary ship structural design for much the same reasons as the building design programs. Programs using configurations such as curved girders are certainly unnecessary for our purposes. The use of specialized theory such as the Vlasov equations or the direct stiffness harmonic analysis and special purpose finite elements may also be found in these programs.

Changing an existing bridge or building design program to one suitable for use by the ship structural designer would be extremely expensive because of the major changes it would entail in the loads, the design criteria, and the specialized theories often used in those programs.

5. There are quite a few well-developed structural design systems in use in the aerospace industry today such as Boeing's ATLAS. They have indeed contributed to the industry's efficiency. These systems generally have the ability to graphically define a fuselage or wing form, calculate the aerodynamic loads, generate the structural model, perform the stress, displacements or flutter analyses needed, and redesign, using in most cases an optimality criterion such as the fully stressed design. These are very large systems that operate on main frame computers with graphics hardware sometimes used in conjunction with local minicomputers. These programs would at first sight seem better candidates for a revision to the marine environment than the civil-engineering-related design programs. While this is true, we recommend against this avenue for two reasons. First, although these programs are generally well engineered as regards to modularity and the main changes involved would be with respect to the loads and design criteria, such changes would still be extensive and may take a few man years when one considers the many man years typically spent in developing such a large system. Secondly, these programs, for all their elegance and capability, may not be able to operate on a minicomputer since they were probably not designed with core limitations in mind. This latter fact would not add to their attractiveness to the ship design community.

6. The software that comes the closest in the marine field to our concept of a preliminary structural design of ships are HULDA from Det norske Veritas and INDETS from the Norwegian Institute of Technology. The former provides both rule-dependent and direct-calculation programs integrated together in such a manner that the results stored on the data base by one program are directly useable by the others. The system contains programs for the overall hull form definition, transverse section definition and its synthesis using rules, the computation of ship motions and sea loads by strip theory methods, traditional shear force and bending moment calculations, shear flow computation, three-dimensional frame analysis, and optimization of the frame structure.
A program such as HULDA may be used for the preliminary structural design of ships, possibly with some additional features and utilities. INDETS, an acronym for the Integrated Design of Tanker Structures, is a system of programs that work off a common data base and operate under the BOSS executive system. Both INDETS and BOSS were developed at the Norwegian Institute of Technology at Trondheim. INDETS differs from HULDA in that it supplies a definite philosophy of its own regarding the design sequence as an iterative sequence of jobs, in its extensive use of mathematical programming techniques, and in that it offers no means of computation of hull girder loads. Neither HULDA nor INDETS has a capability for finite-element analysis that may sometimes be needed even in the preliminary design stages. INDETS and HULDA are described in detail in Chapter III.

D. RECOMMENDATIONS

1. The plan of action recommended here is to develop a new system with the various components that are described in detail in Chapter IV, keeping in mind the ideal computer-aided design system enunciated therein. The main elements of the system would include an executive routine that administers and controls the several application programs, an application program capable of general finite-element analysis, an optimization capability based on an optimality criterion such as the fully stressed design, an application program to compute the structural loads and the ability to interject various design criteria whether rule or direct. The system would have a graphic-based interactive capability. Existing programs could, to the extent possible, be used as components in this system. (Many of them are available for payment of distribution costs alone.) Their interface compatibility is to be developed. A good design of the data base and executive program are necessary. A list of existing programs that could be considered representative of the various aspects of the preliminary ship structural design process may be found in the table in Chapter IV.

An example of the above-mentioned approach would be to develop a module that computes and pre-processes the structural loads for use by an existing analysis program (such as GIFTS) and having good graphics capabilities for data entry, editing, and display. An extension of the analysis routines to include a fully stressed design capability would also be necessary. Properly designed, the entire system would be integrated together through the use of a good executive routine or design environment, and would be able to operate on a reasonably powerful minicomputer.

2. A centralized software coordination effort that would broadly oversee the development of software, and serve as a clearing-house for software-related information, is desirable. Such an effort would serve to inform the maritime community of the availability of software and would thus reduce the duplication of efforts. It would also help decide where the resources available for software-development could be spent for the best overall benefit.

ACKNOWLEDGEMENT

The authors would like to express their thanks to the Ship Structure Committee for supporting this project and to the project Advisory Committee for their valuable discussion. They would like to thank the numerous individuals and organizations that so generously gave their time in responding to the questionnaires and queries. The authors wish also to acknowledge the assistance of Ms. S. Monrad for her able work on the manuscript.

REFERENCES

NOTE: These references are also used in the Appendix.

[1] Gallagher, R. H., "Computerized Structural Analysis and Design -- The Next Twenty Years." Computers and Structures, Vol. 7, 1977, pp. 495-501.

[2] Kamel, H. A., "Interactive Graphics as a Tool in Teaching Structural Analysis." J. Structural Division, ASCE, (ST8), August 1978, pp. 1299-1314.

[3] Structural Design Applications of Mathematical Programming Techniques, G. G. Pope and L. A. Schmit, editors. AGARD ograph 149, February 1971.

[4] Miller, R. E. and McCaslin, J., "Cost Effective Matching of Task and Computing Device." J. Structural Division, ASCE, Vol. 97, January 1971, pp. 329-337.

[5] Green, E. P., "An Assessment of the Mini/Microcomputer Impact on NASA." NASA Goddard Publication X-251-75-73, March 1975.

[6] Storaasli, O. O., "On the Role of Minicomputers in Structural Design." Computers and Structures, Vol. 7, 1977, pp. 117-123.

[7] Kamel, H. A. and McCabe, M. W., "Application of GIFTS III to Structural Engineering Problems." Computers and Structures, Vol. 7, 1976, pp. 399-415.

[8] Vahl, T., "Present and Future Possibilities within Computer-Aided Design." Computers and Structures, Vol. 4, 1974, pp. 115-130.

[9] Computer-Aided Ship Design, R. S. Johnson, H. Nowacki, and T. F. Ogilvie, editors. Department of Naval Architecture and Marine Engineering, Report No. 001, University of Michigan, Ann Arbor, May 1968.

[10] Nagy, D., "Software Engineering for Finite-Element Analysis." J. Structural Division, ASCE, (ST8), August 1978, pp. 1287-1298.

[11] Baron, M. L., Fenves, S. J., and Schiffman, R. L., "A National Software Center for Engineering." Structural Mechanics Computer Programs, W. Pilkey, K. Saczalski, and H. Schaeffer, editors. University of Virginia Press, Charlottesville, Virginia, 1974.

[12] Moone, E. C. E., "Software Coordination Efforts." Computers and Structures, Vol. 6, 1976, pp. 489-496.

[13] Kuo, C., "Computer Applications in Ship Technology." Heyden and Son, London, 1977.

[14] Yuille, I. M., "The Forward Design System for Computer-Aided Ship Design Using a Minicomputer." The Naval Architect, November 1978.

[15] Murphy, R. D., Sabat, D. J., and Taylor, R. J., "Least Cost Ship Characteristics by Computer Techniques." Journal of Marine Technology, Vol. 2, No. 2, 1965, pp. 174-202.

[16] Nowacki, H., Brusis, F., and Swift, P. M., "Tanker Preliminary Design -- An Optimization Problem with Constraints." Trans. SNAME, Vol. 78, 1970.

[17] Ship Hull Characteristics Program SHCP, CASDAC #231072 User's Manual. Naval Ship Engineering Center, January 1976.

[18] Rhodes, T. and Gorham, W., "COMRADE -- The Computer-Aided Design Environment Project -- An Introduction." DTNSRDC Report No. 76-001, November 1976.

[19] Romberg, B. W. and Roth, C. E., "CASDOS -- A System for the Computer-Aided Structural Detailing of Ships: Present Status." Journal of Marine Technology, July 1969.

[20] ICES System Design, D. Roos, Department of Civil Engineering, Massachusetts Institute of Technology, MIT Press, Cambridge, June 1966.

[21] Aughey, M., "Unified Hull Definition System." Proceedings of the 1975 REAPS Technical Symposium, Palm Beach Shores, Florida, June 1975.

[22] Fuller, A. L., Aughey, M. E., and Billingsley, D. W., "Computer-Aided Ship Hull Definition at the Naval Ship Engineering Center." Symposium on Computer-Aided Hull Surface Definition, U. S. Naval Academy, Annapolis, Maryland, 1977.

[23] Argyris, J. H. and Kelsey, S., "Energy Theorems and Structural Analysis." Aircraft Engineering, 1954-55.

[24] Turner, M. J., Clough, R. W., Martin, H. C., and Topp, L. C., "Stiffness and Deflection Analysis of Complex Structures." Journal of Aeronautical Sciences, Vol. 23, No. 9, 1956.

[25] Paulling, J. R., "The Analysis of Complex Ship Structures by the Finite-Element Techniques." Journal of Ship Research, Vol. 8, No. 3, December 1964, pp. 1-14.

[26] Adamchak, J. C., "User's Manual for the Modified Finite-Element Program FINEL." NSRDC Report No. 3609, November 1970.

[27] Kamel, H. A. and McCabe, M. W., "GIFTS 4 User's Manual; Graphics-Oriented Interactive Finite Element Time-Sharing System." University of Arizona, Tucson, Arizona, 1976.

[28] "Engineering Programs -- A Survey of Engineering Programs of Det norske Veritas and A. S. Computas." A. S. Computas, Oslo, Norway, 1977.

[29] Meyers, W. G., Sheridan, D. J., and Salvesen, N., "Manual - NSRDC Ship Motion and Seaload Computer Program." NSRDC Report No. 3376, February 1975.

[30] Lloyds' Register's Plan Appraisal System for Ships LR.PASS -- Current Facilities, Lloyds' Register of Shipping, London, January 1979.

[31] HULDA Example Manual: NV 900, NV 901, NV 902, NV 905, NV 900P. Det norske Veritas, Oslo, Norway. Also see Ref. [28].

[32] Vedeler, G., "Minimum Weight of Structural Parts." Det norske Veritas, Publication No. 26, November 1961.

[33] Evans, J. H., "A Structural Analysis and Design Integration with Application to the Midship Section Characteristics of Transversely Framed Ships." Trans. SNAME, 1958, pp. 244-309.

[34] Antoniou, A. C., "An Analysis of the American Bureau of Shipping Rules with Application to the Design of the Midship Section of Longitudinally Framed Tankers." SNAME, New England Section, March 1961.

[35] Vedeler, G., "An Explanation of Some New Details in the Rules of a Classification Society." Trans. NECIES, Vol. 70, 1953-54, p. 45.

[36] Roth, C. E. III, "Computer Applications to Midship Section Synthesis." M.I.T. Department of Ocean Engineering, Report No. 72-12, 1972.

[37] Moe, J., "Fundamentals of Optimization." Computers and Structures, Vol. 4, 1974, pp. 95-113.

[38] Fiacco, A. V. and McCormick, G. P., "Nonlinear Programming Sequential Unconstrained Minimization Techniques." Wilay, New York, 1968.

[39] Walz, R. W., Lev, F. M., and Nappi, N. S., "Structural Synthesis Design Program." DTNSRDC Report No. 77-0032, December 1977.

[40] Moe, J., "Integrated Design of Tanker Structures." Numerical and Computer Methods in Structural Mechanics, S. J. Fenves, N. Perrone, A. R. Robinson and W. C. Schnobrich, editors. Academic Press, New York, 1973, pp. 415-437.

[41] Carlsen, C. A., "Automated Design of Plane Transverse Bulkheads in Tankers." Meddelelse SK/M 29, Norwegian Institute of Technology, Trondheim, April 1974.

[42] Baier, K. P., Nowacki, H., Schubert, C., and Weichbrodt, A., "A General Purpose Software System for Optimization in Ship Design." Computer Applications in the Automation of Shipyard Operation and Ship Design II, Jacobsson, et. al., editors, North Holland Publishing Company, 1976.

[43] Mitchell, A. G. M., "The Limits of Economy of Material in Frame Structures." Philosophical Magazine, Series G, Vol. 8, 1904.

[44] Barnett, R. L. and Hermann, P. C., "High Performance Structures." NASA CR-1038, 1968.

[45] Venkayya, V. B., "Design of Optimum Structures." Computers and Structures, Vol. 1, No. 1, 1971, pp. 265-309.

[46] Finifter, D. and Mansour, A., "Finite-Element Analysis and Optimization of a Web Frame of a Tanker with Isolated Ballast System." Journal of Ship Research, Vol. 18, No. 2, June 1974, pp. 85-95.

[47] Batt, J. R., Dupree, D., and Eckman, E., "Structural Design for Surface Effect Ships." Bell Aerospace Company, Report No. 7363-950002, October 1970.

[48] Computer-Aided Ship Design and Construction (CASDAC) - Navy Decision Coordinating Paper, NDCP S-0381-SL, April 1978.

[49] Brainin, J., "Function Description for the Integrated Ship Design Systems (ISDS)." DTNSRDC Report No. 4663, April 1975.

[50] Mehlum, E. and Sorensen, P. F., "Example of an Existing System in the Shipbuilding Industry: Autokon System." Proceedings of the Royal Society, London, Series A, Vol. 321, 1971.

[51] Chen, R. and Cuthill, E., "Computer Science Research and Development in Support of Ship Design, Production and Repair." DTNSRDC Report No. 78/104, December 1978.

[52] Sisson, J., "The Management Information System for U. S. Naval Shipyards, A Constantly Growing Capability." Proceedings ICCAS, Gothenberg, North Holland Publishing Company, New York, 1976.

[53] Spindel, P. D., "Computer Applications in Civil Engineering." Van Nostrand Reinhold Co., New York, 1971.

[54] Fenves, S. J., Logcher, R. D., and Mauch, S. P., "STRESS: A Reference Manual." M.I.T. Press, Cambridge, Massachusetts, 1965.

[55] Logcher, R., Connor, J., and Nelson, M., "ICES STRUDL-II - The Structural Design Language: Engineering User's Manual." Research Report R70-77, Department of Civil Engineering, Massachusetts Institute of Technology, Cambridge, June 1971.

[56] The GENESYS Reference Manual, Genesys Ltd., Pennine House, Lemyngton Street, Loughborough, Leicestershire, United Kingdom, October 1974.

[57] Lopez, L. A., "POLO: Problem-Oriented Language Organizer." Computers and Structures, Vol. 2, 1972, pp. 555-572.

[58] Schrem, E., "A Short Description of ASKA." ASKA UM-215, Institut fur Statik und Dynamik, University of Stuttgart, Stuttgart, W. Germany, 1975.

[59] Bathe, K. J., Wilson, E. L., and Peterson, F. E., "SAP IV - A Structural Analysis Program for Static and Dynamic Response of Linear Systems." EERC 73-11, Earthquake Engineering Research Center, College of Engineering, University of California, Berkeley, June 1973, Revised April 1974.

[60] Wilson, E. L., "SOLID SAP - A Static Analysis Program for Three-Dimensional Solid Structures." UC SESM 71-19, Department of Civil Engineering, University of California, Berkeley, September 1971, Revised December 1972.

[61] Bathe, K. J., Wilson, E. L., and Iding, R. H., "NONSAP - A Structural Analysis Program for Static and Dynamic Response of Nonlinear Systems." Report No. UC-SESM 74-3, Department of Civil Engineering, University of California, Berkeley, February 1974.

[62] Al-Banna, S. and Feeser, L. J., "Final Report: Special Conference on Computer Graphics as Related to Engineering Design." Vols. 1 and 2, Columbia University, New York and University of Colorado, Boulder, July 1973.

[63] Applications of Computer Graphics in Engineering, A Conference Held at Langley Research Center, Hampton, VA, October 1975, NASA SP-390, NASA, Washingto, D. C., 1975.

[64] AASHTO Standard Specifications for Highway Bridges (11th Edition, 1973) and the Interim Specifications (1974-1977).

[65] Davis, J. D., Sommervaille, J. J., and Zienkiewicz, O. C., "Analysis of Various Types of Bridges by the Finite-Element Method." Proc. International Conference on Developments in Bridge Design and Construction, K. C. Rockey, J. L. Bannister, and H. R. Evans, editors, Crosby Lockwood and Son, London, 1971, pp. 217-236.

[66] Heins, C. P., "Behaviour and Design of Curved Girder Bridges." Proc. International Conference on Developments in Bridge Design and Construction, K. C. Rocky, et. al., editors, Crosby Lockwood and Son, London, 1971, pp. 287-303.

[67] Vlasov, V. Z., "Thin-Walled Elastic Beams." 2nd Edition, National Science Foundation, Washington, D.C., 1961.

[68] Scordelis, A. C., "Analytical Solutions for Box Girder Bridges." Proc. International Conference on Developments in Bridge Design and Construction, K. C. Rockey, et. al., editors, Crosby Lockwood and Son, London, 1971, pp. 200-216.

[69] Goble, G. G., Hsu, K. Y., and Yeung, J., "Automated Optimum Design of Some Highway Bridges and Bridge Elements." Ohio Department of Transportation, Report No. OHIO-DOT-10-77, September 1974.

[70] G. B. Ministry of Transport, "Suite of Bridge Design and Analysis Computer Programs BECP/1." Vol. 1, User's Manual, Vol. 2, 1969.

[71] Anderson, R. G., and Douglas, M. R., "Prestressed Concrete Slab Bridges." Proc. International Conference on Developments in Bridge Design and Construction, K. C. Rockey, et. al., editors, Crosby Lockwood and Son, London, 1971, pp. 113-130.

[72] Wilson, E. L. and Dovey, H. H., "Three-Dimensional Analysis of Building Systems - TABS." Report No. EERC 72-8, Earthquake Engineering Research Center, University of California, Berkeley, December 1972.

[73] Guendelman, R., "Inelastic Earthquake Response of Three-Dimensional Buildings." Ph.D. Thesis, University of California, Berkeley, 1976.

[74] Sowards, R. D., "An Evaluation of Computer-Aided Reinforced Concrete Building Design." Research Report No. R73-30, Structures Publication No. 366, MIT, Cambridge, Massachusetts, June 1973.

[75] Khan, F. R, Iyengar, S. H., and Colaco, J. P., "Computer Design of the 100-Story John Hancock Center." Journal of Structural Division, ASCE, Vol. 92 (ST6), December 1966, pp. 55-73.

[76] Taylor, R. E., "Computers and the Design of the World Trade Center." Journal of Structural Division, ASCE, Vol 92, (ST6), December 1966, pp. 75-91.

[77] User's Manual: Computer Program for Steel Column Design, CDA 1-69, AISC Inc., New York, 1972.

[78] Feeser, L. J., "Interactive Analysis and Design of Steel Frames Using the AISC Specification." Computers and Structures, Vol. 7, 1977, pp. 23-33.

[79] "Craddock, A., "RC-Building/1, A Genesys Subsystem for the Computerized Design and Detail of R/C Structures." Presented at the Second National Symposium on Computerized Structural Analysis and Design, at the School of Engineering and Applied Science, George Washington University, Washington, D. C., March 1976.

[80] Fulton, R. E., and McComb, H. G., "Automated Design of Aerospace Structures." ASME International Conference on Design Automation, Toronto, Canada, September 1971.

[81] Butler, T. G. and Michel, D., "NASTRAN - A Summary of the Functions and Capabilities of the NASA Structural Analysis Computer System." NASA SP-260, 1971.

[82] Dreisbach, R. L., "ATLAS - An Integrated Analysis and Design System User Manual." Boeing Document D6-25400-0003TN, 1974.

[83] Bendavid, D., Pipano, A., Raibstein, A., and Somekh, E., "Interactive Computer Graphics System for Structural Sizing and Analysis of Aircraft Structures." Conference on the Applications of Computer Graphics in Engineering, Hampton, Virginia, October 1975. Published as NASA SP-390, NASA, Washington, D. C., 1975.

[84] Southhall, J. W., "IPAD Executive Summary." D6-IPAD-70020-M, April 12, 1978. Prepared by the Boeing Commercial Airplane Company, Seattle, Washington, for the NASA Langley Research Center.

[85] Glatt, C.R., Hirsch, G. N., Alford, G. E., Colquitt, W. N., and Reiners, S. J., "The Engineering Design Integration (EDIN) System." NASA Contractor Report CR-141598, December 1974.

[86] English, C. H., "Interactive Computer Aided Technology: Evolution in the Design/Manufacturing Process." Conference on the Applications of Computer Graphics in Engineering, Hampton, Virginia, October 1975. Published as NASA SP-390, NASA, Washington, D. C., 1975.

References Used in the Appendix

[87] Johnson, R.S., "The Changing Nature of the U.S. Navy Ship Design Process." Presented at the International Symposium on Advances in Marine Technology, Trondheim, Norway, June 1979. Also, see The Naval Engineer's Journal, Vol. 92, No. 2, April 1980, pp. 88-113.

[88] Maiorana, C.S. and Gray, M., "Hull Manipulation, Decking Out, and Hydrostatic Calculations Program." NSRDC Report No. 2650, May 1968.

[89] COSMIC (Computer Software Management and Information Center) Program Abstracts, University of Georgia, Athens.

[90] Schaff, J. R., "GOGAP: An Interactive Graphics Minicomputer-Based Ship's Arrangements Program." Proceedings of the 1975 REAPS Technical Symposium, Palm Beach, Florida, 1975.

[91] Chen, R. and Thomson, B. M., "Divider Design--An Extension of the Computer Graphics Arrangements Program (COGAP) User's/Systems Manual." DTNSRDC Report No. CMD-76-17, August 1976.

[92] Woodward, J. B., "The Computer System SPIRAL-Documentation for the User and the Module Writer." Department of Naval Architecture, University of Michigan, Ann Arbor, Report No. 212, June 1979, 215 pp.

[93] Liang, S. W. and Bolting, M. M., "Computer Program Documentation: Program PROVIB Design and Vibration Analysis of a Ship Propulsion System." Part I - Designer's Manual; Part II - Programmer's Manual; Part III - Sample Programs. NSRDC Reports 3172-1,2,3, October 1969.

[94] Doelling, N., "Computer-Aided Preliminary Design of Ships." The National Oceanic and Atmospheric Administration, Sea Grant Office, Rockville, Maryland, MITSG 78-13, July 1978.

[95] Mandel, P. and Leopold, R., "Optimization Methods Applied to Ship Design." Trans. SNAME, Vol. 74, 1966, pp. 477-521.

[96] Gilfillan, A. W., "Economic Design of Bulk Cargo Carriers." Trans. RINA, Vol. III, 1969.

[97] Fisher, K. W., "Economic Optimization Procedures in Preliminary Ship Design." Trans. RINA, Vol. 114, 1972.

[98] Kupras, L. K. and de Zwaan, A. P., "Preliminary Ship Design with Interactive Graphical Aids." The Naval Architect, July 1977.

[99] Gillmer, T.C., Modern Ship Design, Naval Institute Press, Annapolis, Maryland, 1975.

[100] "New Computer Programs for Shipping and Shipbuilding." The Naval Architect, November 1977, p. 206.

[101] Hennig, G., "Computer-Aided Design of Ship Form in the Man/Machine Dialogue." Schiffbauforschung, Special Number for the Symposium on Rationalization of Technical Preparation for Production in Shipbuilding held in Rostock, Vol. 15, BSRA No. 47640, April 1976.

[102] "Computer Applications in the Automation of Shipyard Operations and Ship Design. A Report on ICCAS 79 - The Third IFIP/IFAC Conference held at the University of Strathclyde." The Naval Architect, November 1979, Proceedings to be available from the North-Holland Publishing Company, New York.

[103] Wu, S.C., Abel, J.F., and Greenberg, D. P., "An Interactive Computer Graphics Approach to Surface Representation." ACM Communications, Vol. 20, October 1977.

[104] "DOS/VS Entry for Computed Aided Design - DECADE." Application Guide, IBM United Kingdom Ltd., Feltham, England, October 1977.

[105] Beyer, E., Hansen, H.R., and Gisvold, K. M., "Outline of a General User-Oriented Computer-Aided Design System, as Applied to Ship Design - BOSS." Department of Ship Structures, Meddelelse SKB II/M15, Trondheim, July 1969.

[106] Pahl, P. J., "Systemkerne für CAD - Informations Systeme." In German, CAD-Mitteilungen, Vol. 1/1973, Gessellschaft für Kernfoschung mbH, Karlsruhe, pp. 323-338.

[107] Egeland, O. and Araldsen, P. O., "SESAM-69 -- A General Purpose Finite-Element Method Program." Computers and Structures, Vol. 4, 1974, pp. 41-68.

[108] Kamel, H.A., "DAISY User's Manual." University of Arizona, Tucson, Arizona, October 1976.

[109] Tanaka, N. and Mii, T., "The Mitsui Structural Analysis Program System." (MISA By the Finite Element Method), Mitsubishi Heavy Industries Technical Review, No. 93, BSRA No. 46621, 1976.

[110] S. Tashiro, Nippon Kaiji Kyokai (NKK), in response to our questionnaire, December 1979.

[111] Hylarides, S., "DASH, Computer Program for Dynamic Analysis of Ship Hulls." Netherlands Ship Research Centre TNO Report No. 159S, September 1971.

[112] Raff, A. I., "Program SCORES -- Ship Structural Response in Waves." Ship Structures Committee Report SSC-230, 1972.

[113] Loukakis, T., "Computer-Aided Prediction of Seakeeping Performance in Ship Design." MIT Department of Ocean Engineering, Report No. 70-3, August 1970.

[114] "SPRINGSEA II -- Springing and Seakeeping (Program)." American Bureau of Shipping, New York. Also see "SPRINGSEA II, Program Listing and User's Manual," Mansour Engineering, Inc., Berkeley, California, 1974.

[115] Antonides, G. P., "A Computer Program for Structural Response to Ship Slamming (SLAM)." NSRDC Report No. 4480, July 1975.

[116] Chow, W. Y., Harris, D. H., Chako, E. J., Shilling, R., and Herbich, J.B., "Additional Computer Programs in Ocean Engineering." Texas A&M University Report No. TAMU-SG-77-209, August 1977.

[117] Kaplan, P., Sargent, T. P., and Raff, A. I., "An Investigation of the Utility of Computer Simulation to Predict Ship Structural Response in Waves." Ship Structures Committee Report No. SSC-197, June 1969.

[118] Kaplan, P. and Sargent, T. P., "Further Studies of Computer Simulation of Slamming and Other Wave-Induced Vibratory Structural Loading in Ships in Waves." Ship Structures Committee Report SSC-231, 1972.

[119] Muller, W., "Methods and Problems in the Automated Design of Steel Hulls for Merchant Ships." Schiffbauforshung, Vol. 15, Rostock, E. Germany, BSRA No. 47636, 1976.

[120] Cross, R. and Thomson, B., "Assessment of Ship Dynamics Programs for Possible Integration into the Integrated Ship Design System." DTNSRDC Report No. CMD-76-22, April 1976.

[121] Stiansen, S. G., "Structural Response and Computer-Aided Design Procedure." Presented at SNAME Ship Structure Symposium, Washington, D.C., October 1975.

[122] "Lloyd's Register Plan Appraisal System for Ships, LR.PASS. Technical Programs Available for Use on the Hewlett Packard Desk-Top Computer (HP-9845S)." Lloyd's Register of Shipping, London, January 1979.

[123] "A Description of the LR.SHIPS System." D.U. Report No. 15, Lloyd's Register of Shipping, London.

[124] Goodwin, J. J., "A Description of the LR.SAFE System." D.U. Report No. 282, Lloyd's Register of Shipping, London, June 1979.

[125] Lloyd's Register of Shipping Annual Report, 1976, Lloyd's Register of Shipping, London.

[126] Akita, Y., et. al., "Total System of Analysis on the Longitudinal Strength of Ships." Journal of the Society of Naval Architects of Japan, Vol. 135, June 1974.

[127] "Marine Structures Computer System (MARCS)." The Naval Architect, January 1979, p. 33.

[128] Nielsen, R., Chang, P. Y., and Deschamps, L. C., "Structural Analysis of Longitudinally Framed Ships." Ship Structures Committee Report No. SSC-225, 1972.

[129] Nielsen, R., Chang, P. Y., and Deschamps, L. C., "Tanker Longitudinal Strength Analysis -- User's Manual and Computer Program." Ship Structures Committee Report SSC-226, 1972.

[130] Neilsen, R., Chang, P. Y., and Deschamps, L. C., "Tanker Transverse Strength Analysis - User's Manual." Ship Structures Committee Report No. SSC-227, 1972.

[131] Emtell, H. and Ovrebo, B., "A Systematic Analysis of Weight of the Transverse Bulkhead in a 120,000 TDW Oil Tanker." European Shipbuilding 14 (4), 1965, pp. 68-79.

[132] Johnsen, I. and Ovrebo, B., "Optimization Studies of Hull Constructions of Large Ships with Different Steel Types Taken into Consideration." European Shipbuilding, 15 (6), 1966, pp. 95-108. Also 16 (1), 1967, pp. 10-26.

[133] Evano, J. H. and Khoushy, D., "Optimized Design of Midship Section Structure." Trans. SNAME, Vol. 71, 1963, pp. 144-191.

[134] St. Denis, M., "A Guide for the Synthesis of Ship Structures -- Part One, The Midship Hold of a Transversely Framed Dry Cargo Ship." Ship Structure Committee Report SSC-215, 1970.

[135] St. Denis, M., "Program Tranship -- A Computer Program for the Design of the Midship Section of a Transversely Framed Dry Cargo Ship -- Part Two." Ship Structures Committee Report No. SSC-216, 1972.

[136] Silva Dias Filho, G. L. and SaFreitas, E., "Automatic Synthesis of the Structure of Bulk Carriers." Ingenieria Naval, Spain, Vol 46, BSRA No. 49913, October 1978.

[137] Patterson, D. R., Ministry of Defense, Bath, United Kingdom, in response to our Questionnaire, December 1979.

[138] Schmit, L. A. and Mallet, R. H., "Structural Synthesis and Design Parameter Hierarchy." J. Structural Division ASCE, Vol 89 (ST4), 1963, pp. 269-299.

[139] Gellatly, R. A., "Development of Procedures for Large-Scale Automated Minimum Weight Structural Design." Technical Report AFFDL-TR-66-180, December 1966.

[140] Tocher, J. L. and Karnes, R. N., "The Impact of Automated Structural Optimization on Actual Design." AIAA/ASME 12th Structures, Structural Dynamics and Materials Conference, Anaheim, California, April 1971, pp. 1-9.

[141] Brown, D. M. and Ang, A. H. S., "Structural Optimization by Nonlinear Programming." J. Structural Division, ASCE, 92 (ST6), December 1966, pp. 319-340.

[142] Abadie, J., "Numerical Experiements with the Generalized Reduced Gradient Method." The Int. Summer School of Integer and Nonlinear Programming, NATO Advanced Study Institute, France, 1969.

[143] Briggs, W. J. and Willmert, K. D., "Optimum Design of Frames Using Linear Programming Techniques." Clarkson College of Technology Report No. MIE-026, Potsdam, New York, June 1978. Also see, Report No. MIE-027, June 1978 by Calafell, D. O. and Willmert, K. D.

[144] Moses, F. and Onada, S., "Minimum Weight Design of Structures with Application to Elastic Grillages." Intl. J. Numerical Methods in Engineering, 1, 1969, pp. 311-331.

[145] Cornell, C. A., Reinschmidt, K. F., and Brotchie, J. F., A Method for the Optimum Design of Structures." Int'l. Symposium on the Use of Electronic Digital Computers in Structural Engineering, University of Newcastle upon Tyne, England, July 1966.

[146] Reinschmidt, K. F., "Discrete Structural Optimization." J. Structural Division, ASCE, 97 (ST9), January 1971, pp. 133-156.

[147] Moses, F., "Optimum Structural Design Using Linear Programming." J. Structural Division, ASCE, 90 (ST6), 1964, pp. 89-104.

[148] Romstad, K. M. and Wang, C. K., "Optimum Design of Framed Structures." J. Structural Division, ASCE, 94 (ST12), 1968, pp. 2817-2845.

[149] Woodhead, R. G., "The Application of Optimization Methods to Structural Design." BSRA T.M. No. 412, February 1972.

[150] Smith, G. K. and Woodhead, R. G., "A Design Scheme for Ship Structures." Trans. RINA, 115, 1973, pp. 1-12.

[151] Schmidt, L. A. and Fox, R. L., "An Integrated Approach to Structural Synthesis and Analysis." AIAA Journal, 3 (6), 1965, pp. 1104-1112.

[152] Kavlie, D., Kowalik, J., and Moe, J., "Structural Optimization by Means of Nonlinear Programming." Proc. Int. Symposium on the Use of Computers in Structural Engineering, Newcastle, July 1966.

[153] Marcal, P. V. and Gellatly, R. A., "Application of the Created Response Surface Technique to Structural Optimization." 2nd Conference on Matrix Methods in Structural Mechanics, WAFB, October 1968.

[154] Kavlie, D. and Moe, J., "Application of Nonlinear Programming in Optimum Grillage Design with Non-Convex Set of Variables." Intl. J. Numerical Methods in Engineering, 1 (4), 1969, pp. 351-378.

[155] Lund, S., "Optimum Design of Transverse Frame Structures in Tankers." European Shipbuilding, 20 (Nos. 5 and 6), 1971, pp. 3-9 and 2-11, respectively.

[156] Kavlie, D., Kowalik, J., Lund, S., and Moe, J., "Design Optimization Using a General Programming Method." European Shipbuilding, Vol. 15, No. 4, 1966, pp. 52-62.

[157] Moe, J. and Lund, S., "Cost and Weight Minimization of Structures with Special Emphasis on Longitudinal Strength Members of Tankers." Trans. RINA 110, 1968, pp. 43-70. Also, Ingenieur, No. 47 and 49, 1967.

[158] Moe, J., "Optimum Design of Statically Indeterminate Structures by Means of Nonlinear Programming." University of Michigan, Ann Arbor, Department Of Naval Architecture and Marine Engineering, Reports 023 and 024, May 1969.

[159] Moussouros, M., "Finite-Element Optimal Design of Transverse Web Frames." Computers and Structures, Vol. 6, 1976, pp. 253-266.

[160] Hansen, H. R., "Application of Optimization Methods Within Structural Design, Practical Design Example." Computers and Structures, Vol. 4, 1974, pp. 213-220.

REFERENCES (CONT'D)

[161] Mylander, W. C., Holmes, R. L., and McCormick, G. P., "The Guide to SUMT-Version 4." Research Analysis Corporation, Report Number REC-P-63, Mclean, Virginia, October 1972.

[162] Abrahamsen, E., "Optimum Structural Design of Ship Hulls within the Rules of a Classification Society." European Shipbuilding, Vol. 13, No. 1, 1964, p. 2.

[163] Aldwinckle, D. S., "Computer-Aided Structural Design of Bulk Carriers." Trans. NICIES, 1969-70, p. 119.

[164] Adamchak, J. C., "Automated Midship Section Synthesis by the Gross Panel - Structural Synthesis Method." Ship Structural Design Concepts, J. H. Evans, editor, Cornell Maritime Press, Cambridge, Maryland, 1974.

[165] Abstract of ICES Programs. ICES Users Group Inc., Cranston, Rhode Island, January 1980.

[166] Hughes, O.F., Mistree, F. and Zanic, V., "A Practical Method for the Rational Design of Ship Structures," J. Ship Res., 24 (2), June 1980.

[167] Lund, S., "Application of Optimization Methods within Structural Design -- Problem Formulations." Computers and Structures, Vol. 4, 1974, pp. 221-232.

[168] Lund, S., "Direct Search Program for Optimization of Nonlinear Functions with Nonlinear Constraints." User's Manual, SK/P13, Universitetet i Trondheim, Norges Tekniske Hogskole, 1971.

[169] Pappas, M. and Allentuch, A., "Automated Optimal Design of Frame Reinforced Submersible Circular and Cylindrical Shells." Journal of Ship Research, December 1973.

[170] Gellatly, R. A. and Gallagher, R. H., "Development of Advanced Structural Optimization Programs and Their Application to Large Order Systems." Proc. First Conference on Matrix Methods in Structural Analysis, Wright-Patterson Air Force Base, AFFDL-TR-66-80, October 1965, pp. 231-251.

[171] Razani, R., "Behaviour of Fully Stressed Design of Structures and ib Relationship to Minimum Weight Design." AIAA Journal 3 (12),1965, pp. 2262-2268.

[172] Gellatly, R. A. and Berke, L., "Optimal Structural Design." Technical Report AFFDL-TR-71-165, April 1971.

[173] Mistree, F. P., "An Automated Design Procedure for the Design of Complex Structures." Ph.D. Dissertation, Department of Naval Architecture, University of California, Berkeley, February 1974.

[174] Gellatly, R. A., "Optimization and Materials Selection." Paper presented to AGARD Structures and Materials Panel, Athens, April 1970.

[175] Hysing, T. and Sorensen, P. F., "Application of the Autokon System in Shipbuilding." Trans. SNAME, 1968.

[176] Sheridan, H., "An Overview of a CASDAC Subsystem - Computer-Aided Piping Design and Construction (CAPDAC)." Naval Engineers Journal, Vol. 88, No. 5, October 1976.

[177] Cinque, A. A. and Sheridan, H. C., "Program PIPSLQ - Sizing Pipe Networks - Incompressible Flow and Preparation of Material Lists." Vol I - Designer's Manual; Vol. II, Programmer's Manual, NSRDC Report No. 2365-1, 2, April 1967.

[178] Computer-Aided Ship Design and Construction (CASDAC) - Economic Analysis, Naval Ship Engineering Center, December 1977.

[179] Robert, O. J., "Integrated Theory of Seakeeping and Structural Dynamics." Unpublished Master of Science Thesis, MIT Department of Ocean Engineering, June 1975.

[180] Rogmann, N. H., "Application of the GIPS Program System for an Active Graphic Display Unit and a Drafting Machine." Schiffbauforschung, Vol. 15, BSRA No. 47639, 1976.

[181] Stroobants, G., "Program for Ship's Hull Fairing, Variation, Shell Plate Development and Hydrostatic Calculation for Minicomputers." Proc. 4th Kongsberg Vapenfabrik Shipbuilding Symposium, Newcastle upon Tyne, BSRA No. 48949, May 1978.

[182] Sodig, H., "Ship Design and Construction Programs." Parts 1, 2, and 3. New Ships, July, August, and September, 1977.

[183] Cyriaks, K., "Position of EDP Application in the Design Technology of Hull Production Preparation." Schiffbauforshung, Vol. 15, BSRA No. 47637, 1976.

[184] "Computer Applications in the Automation of Shipyard Operation and Ship Design." A Report on ICCAS 79, the Third IFIP/IFAC Conference held at the University of Strathclyde. The Naval Architect, November 1979. Proceedings to be available from the North-Holland Publishing Company.

[185] "An Alternative to Shell Expansion Drawing - BSRA's Effort to Overcome Difficulties in Computer Display of Fore and Aft End Regions." The Naval Architect, November 1977, pp. 198-199.

[186] Hurst, R., "BRITSHIPS - An Integrated Design and Production System." Proceedings of the ICCAS, Tokyo, 1973.

REFERENCES (CONT'D)

[187] Cali, F., "An Introduction to the SPADES System and Some Thoughts on Industry Needs." Proceedings of the REAPS Technical Symposium, IIT Research Institute, Chicago, Illinois, June 1974.

[188] Schorsch, E., "The Steerbear System at Sun Ship." Marine Technology, Vol. 12, No. 2, April 1975.

[189] Abal, D. and Belda, J. A., "FORAN System - Considerations on the Development of an Integrated Ship Design and Production System." Third Korgsberg Shipbuilding Symposium Proceedings, Trieste, Italy, October 1974. Korgsberg Systems Inc., Bedford, Massachusetts.

[190] Magnusson, L., "VIKING System for Ship Design and Production." Proceedings of the ICCAS, Tokyo, August 1973.

[191] Hattori, Y., Ikeda, Y., and Haga, K., "The NASD System - NKK Advanced Ship Design System." Proceedings of the ICCAS, Gothenburg, 1976.

[192] Braun, D. C., "The Case Western Reserve N/C Frame Bending Machine." Proc. REAPS Technical Symposium, June 1975. Published by the Illinois Institute of Technology, Chicago.

[193] Morignichi, S., "MAPS System: Mitsui Automated Pipe Shop System." Proceedings ICCAS, Tokyo, 1973.

[194] Nishioka, F., Nishimahi, K., and Matsuishi, M., "Automatic Bending of Plates by a Universal Press." Proceedings ICCAS, Tokyo, 1973.

[195] Kohtake, S. and Matsubara, H., "Development of LODACS, A Ship Frame Data Processing System." IHI Engineering Review, Tokyo, Vol. 9, No. 3, July 1976.

[196] Kohtake, S. and Wasnizu, H., "Shell - An Integrated Data Processing System for the Fabrication and Assembly of Shell Plating." Japan Shipbuilding and Marine Engineering, Tokyo, Vol. 10, No. 3, 1976. (MRIS)

[197] Cleveland, A. B. and Alose, S. A., "Automated Pipe Routing for Minimum Cost." ASME Paper No. 77-PVP-46, 1977.

[198] Maryuama, K., "Total Production System Covering Manufacture and Installation of Piping." Journal of the Kansai Society of Naval Architects, Kansai Zosen Kyokai, Osaka University of Japan, Japan, No. 166, September 1977, BSRA No. 48,215.

[199] Standen, G. and Gilbert, D. E., "Recent Developments in the Design and Production of Marine Piping Systems." Institute of Marine Engineers Publication, London, 1977. BSRA No. 45577.

[200] Wangdahl, G. E., Pollock, S. M., and Woodward, J. B., "Minimum Trajectory Pipe Routing." Journal of Ship Research, Vol. 18, No. 1, March 1974.

REFERENCES (CONT'D)

[201] Woodward, J. B., "Arrangement of Shipboard Piping by Digital Computer." Marine Technology, Vol. 12, No. 2, April 1975.

[202] Vander Tak, C. and Koopmans, J. J. G., "The Optimum Routing of Pipes in a Ship's Engine Room." Preprint of the IFIP/IFAC/SSI Computer Applications in the Automation of Shipyard Operation and Ship Design, Gothenburg, Sweden, June 1976. North-Holland Publishing Company, New York.

[203] Tacey, R. K., "A Computer Program for Calculation of the Residual Stress Distribution and the Effective Stress-Strain Curve of Cold Formed Structural Members." DTNSRDC Report No. 76-0141, November 1976.

[204] Fujita, Y. and Yoshida, K., "On the Strength of Structures with Imperfections." Journal of the Society of Naval Architects of Japan, Vol. 14, 1976.

[205] Cacciatore, P. J., "Analytic Modeling of Heat Flow and Structural Distortion in Ship Structures Produced by Welding." General Dynamics Electric Boat Division, Technical Report No. V443-77-085, Groton, Connecticut, October 1977.

[206] Masubuchi, K. and Papzoglu, V. J., "Analysis and Control of Distortion in Welded Aluminum Structures, Trans. SNAME, 1978.

[207] Proceedings of the REAPS Technical Symposium, June 1976, IIT Research Institute, Chicago, Illinois.

[208] "On the Transverse Strength of a 400,000 DWT Oil Tanker with 4-Longitudinal Bulkhead System." Mitsubishi Heary Industries Technical Review, Vol. 16, No. 1, 1979.

[209] Kamel, H. A., McCabe, M. W., and DeShazo, P. G., "Optimum Design of Finite-Element Software Subject to Core Restrictions." Technical Report No. 4, Department of Aerospace and Mechanical Engineering, University of Arizona, April 1978.

[210] Kamel, H. A. and Navabi, Z., "Digitizing for Computer-Aided Finite-Element Model Generation." Technical Report No. 5, Department of Aerospace and Mechanical Engineering, University of Arizona, Tucson, October 1979.

[211] Perrone, N. of the Office of Naval Research, Arlington Virginia. In response to our letter, January 1980.

[212] Finifter, D. of the Institut de Recherches de la Construction Navale, (IRCN), Paris. In response to our questionnaire, March 1980.

[213] Christiansen, H. of Brigham Young University, Provoh, Utah, Department of Civil Engineering. In response to our letter, January 1980.

[214] Campbell, R. of Battelle Columbus Laboratories, Columbus, Ohio. In response to our letter, February 1980.

[215] Pietrzak, J. M. in response to our letter. The National Energy Software Center, Argonne National Laboratory, Argonne, Illinois, January 1980.

[216] Caldwell, J. B. of the University of Newcastle upon Tyne, United Kingdom, in response to our questionnaire, February 1980.

[217] American Bureau of Shipping: ABS/DAISY System of Programs for Ship Structural Analysis, 1975.

[218] Kaldjian, M. J. and Huang, K. N., "User's Guide to PREMSAP -- An Interactive Data Processor for the Michigan Structural Analysis Program MSAP." Department of Naval Architecture and Marine Engineering, University of Michigan, Ann Arbor, February 1976.

[219] Thornton, E. A. and Sawyer, L. M., "A Computer Graphics Program for General Finite-Element Analyses." Old Dominion University Research Foundation, Report for NASA-CR-157421, Norfolk, Virginia, August 1978.

[220] Kamel, H. A., "Application of the GIFTS-5 Mini-Based Graphics System for Ship Design and Analysis." Presented at the REAPS Symposium, San Diego, California, September 1979.

[221] Johnsen, K. R., "Pilot -- An Interactive Desk-Top Computer System for Ship Design." Det norske Veritas, March 1980. Also see: Outline of the Pilot System.

[222] Directory of Computer Programs of Federal Construction Agencies. Survey of Practice Report No. 9-77, Building Research Advisory Board, National Academy of Sciences, Washington, D.C., 1977.

[223] Structural Mechanics Computer Programs: Surveys, Assessments, and Availability. W. D. Pilkey, H. G. Schaeffer and K. Saczalski, editors. University of Virginia Press, Charlottsville, 1974, 1105 pp. Also see Structural Mechanics Software series, Vols. II and III, N. Perrone and W. D. Pilkey, editors, University of Virginia Press.

[224] A Directory of Computer Software Applications - Marine Engineering, 1970 - April 1979. NTIS/SA-79/06, National Technical Information Service, Springfield, Virginia, May 1979.

[225] Handbuch der Werften 1978. Schiffahrtsverlag "Hansa", Hamburg, West Germany. The pertinent Chapter in the book is by H. G. Payer.

[226] Proceedings of the International Conference on Computer Application in the Automation of Shipyard Operations and Ship Design (ICCAS); Tokyo, 1973; Gothenberg, 1976 and Strathclyde, 1979. Elservier North Holland Publishing Company, New York.

[227] Wilson, E. L., "SMIS: Symbolic Matrix Interpretive System." Report No. UC-SESM 73-3,Department of Civil Engineering, University of California, Berkeley, April 1963. Modified January 1973.

[228] Wilson, E. L., "CAL - Computer Analysis Language for the Static and Dynamic Analysis of Structural Systems." Report No. UC-SESM 77-2, Department of Civil Engineering, University of California, Berkeley, January 1977.

[229] Mays, J. R., "EMOI - Extended Matrix Operation Interpreter." Department of Civil and Urban Engineering, University of Colorado, Denver, 1977.

[230] Bell, et. al., "NORSAM: A Programming System for the Finite-Element Method." Norwegian Institute of Technology, Division of Structural Mechanics, Trondheim, Norway, 1973.

[231] Wilhelmy, V. and Keisbauer, H., "Some User Aspects of TOPAS." IKOSS Finite Element Congress, Baden-Baden, Germany, 1976.

[232] Kaldjian, M. J., "Interactive Data Processor Program for Michigan SAP (MSAP)." Intl. Journal of Computers and Structures, Vol. 6, 1976, pp. 405-412.

[233] Kaldjian, M. J. and Huang, K. N., "User's Guide to MSAPLOT - A 3-D Interactive Graphic Display Program for Input and Output Data of Michigan Structural Program MSAP." No. 172, Dept. of Naval Architecture and Marine Engineering, University of Michigan, Ann Arbor, June 1975.

[234] STARDYNE User's Manual, Mechanics Research Inc., Los Angeles, California. Also, a CDC CYBERNET Program.

[235] Nicolas, V. T. and Citipitioglu, E., "A General Isopanametric Finite Element Program SDRC SUPERB." Intl. Journal of Computers and Structures, Vol. 7, 1977, pp. 303-313.

[236] DeSalvo, G. J. and Swanson, J. A., "ANSYS: Engineering Analysis System. User's Manual." Swanson Analysis Systems, Inc., Elizabeth, Pennsylvania, 1972.

[237] Mondkar, D. P. and Powell, G. H., "ANSR-1 -- General Purpose Program for the Analysis of Nonlinear Structural Response." Report No. EERC 75-37, Earthquake Engineering Research Center, University of California, Berkeley, December 1975.

[238] ULARC -- Small Displacement Elasto-Plastic Analysis of Plane Frames. Developed by A. Sudhakar, G. H. Powell, G. Orr and R. Wheaton of the Department of Civil Engineering, University of California, Berkeley, 1972. Computer Software for Earthquake Engineering, Publ. NISEE/Computer Applications, University of California, Berkeley, January 1979.

[239] Kanaan, A. E. and Powell, G. H., "DRAIN-2D -- A General Purpose Computer Program for Dynamic Analysis of Inelastic Plane Structures." EERC Report No. 73-6, Earthquake Engineering Research Center, University of California, Berkeley, April 1973, Revised September 1973.

[240] Ayres, D. J., "Elastic-Plastic Creep Analyses via the MARC Finite Element Computer Program." Numerical and Computer Methods in Structural Mechanics, S. Fenves, et. al., editors. Academic Press, New York, 1973, pp. 247-263.

[241] SUSAN/1: DRAFT USER MANUAL (First Part) Genesys Ltd., Loughborough, England, 1976.

[242] Lopez, L. A., et. al., "FINITE - A POLO Subsystem for Structural Mechanics." Civil Engineering Systems Laboratory, University of Illinois, Urbana, Ill., October 1976.

[243] Firkins, N. L. and Hosack, J. Q., "A Command Structured Approach to Structural Object Plotting and Automated Line Dimensioning." Intl. Journal of Computers and Structures, Vol. 7, 1977, pp. 587-598.

[244] Bennett, J. Creary, L., Englemore, R., and Melosh, R., "SACON: A Knowledge-Based Consultant for Structural Analysis." Department of Computer Science, Stanford University, Technical Report No. STAN-CS-78-699, September 1978.

[245] Finite-Element Modelling and Analysis Language for Engineers, The Naval Architect, January 1979, p. 32.

[246] Heins, C. P. and Looney, C. T. G., "The Analysis of Curved Orthotropic Highway Bridges by the Finite Difference Technique." The University of Maryland, Civil Engineering, Report No. 13, January 1967.

[247] Heins, C. P., "The Presentation of the Slope Deflection Method for the Analysis of Curved Orthotropic Bridges." The University of Maryland, Civil Engineering, Report No. 15, June 1967.

[248] Bell, L. C. and Heins, C. P., "The Solution of Curved Bridge Systems Using the Slope Deflection Fourier Series Method." The University of Maryland, Civil Engineering Report No. 19, June 1968.

[249] Heins, C. P. and Oleinik, J. C., "Curved Box Beam Bridge Analysis." International Journal of Computers and Structures, Vol. 6, 1976, pp. 65-73.

[250] Heins, C. P. and Stroczkowski, J. P., "Computerized Design of Continuous Curved Tubular Girders." Intl. Journal of Computers and Structures, Vol. 6, 1976, pp. 273-280.

[251] Lavelle, F. H., Greig, R. A., and Wemmer, H. R., "CUGAR-1 -- A Program to Analyze Curved Girder Bridges." Engineering Bulletin No. 14, University of Rhode Island, Division of Engineering Research and Development September 1971. Vol.1: User's Information; Vol. 2: System Information.

[252] Mondkar, D. P. and Powell, G. H., CURVBRG - A Computer Program for the Analysis of Curved Open Girder Bridges." College of Engineering, Office of Research Services, University of California, Berkeley, September 1964.

[253] Yoo, C. and Heins, C. P., "User's Manual for the Static Analyses of Curved Girders." Civil Engineering Department, University of Maryland, September 1974.

[254] Richardson, Gordon and Associates, "Curved Girder Workshop." Conducted for the Federal Highway Administration, Pittsburgh, Pennsylvania, 1977.

[255] Fam, A. and Turkstra, C., "A Finite Element Scheme for Box Bridge Analysis." Proc. International Conference on Developments in Bridge Design and Construction, K. C. Rockey, et. al., editors, Crosby Lockwood, London, 1971.

[256] Rabbat, B. G. and Collins, M. P., "The Computer-Aided Design of Structural Concrete Sections Subjected to Combined Loading." The Intl. Journal of Computers and Structures, Vol. 7, 1977, pp. 229-236.

[257] CEPA Library, Civil Engineering Program Application (CEPA), Rockville, Maryland, 1975.

[258] Structural Engineering System Solver (STRESS) For the IBM 1130 (1130-EC-03X) Version 2, User's Manual. IBM Corporation, H 20-0340-2, 1967.

[259] Krueger, R. C., Heins, C. P., and Schelling, D. R., "Design Program for Multistory Structures." Computers and Structures, 1977, pp. 547-551.

[260] Wilson, E. L., Hollins, J. P., and Dovey, H. H., "Three-Dimensional Analysis of Building Systems (Extended Version)." Report No. EERC 75-13, Earthquake Engineering Research Center, University of California, Berkeley, April 1975.

[261] Le, D. Q., Petersson, H. B., and Popov, E. P., SUBWALL - A Special Purpose Finite-Element Computer Program for Practical Elastic Analysis and Design of Structural Walls with Substructure Option." Report No. UCB/EERC-77/09, Earthquake Engineering Research Center, University of California, Berkeley, March 1977.

[262] Otani, S., "SAKE - A Computer Program for Inelastic Response of R/C Frames to Earthquake." Civil Engineering Studies Structural Research Series No. 43, Report No. UILU-Eng-74-2029, University of Illinois at Urbana-Champaign, Urbana, November 1974.

[263] Murakami, M. and Penzien, J., "Nonlinear Response Spectra for Probabilistic Seismic Design and Damage Assessment of Reinforced Concrete Structures." Report No. EERC-75-38, Earthquake Engineering Research Center, University of California, Berkeley, November 1975.

[264] Eulver, C. G., Lew, H. S., Hart, G. C., and Pinkham, C. N., "Natural Hazards Evaluation of Existing Buildings." National Bureau of Standards Building Science Series 61, January 1975.

[265] Omnidata Program Library, Omnidata, New York, June 1970.

[266] Ocean Engineering Computer Programs, Product Information, Information Systems Design Inc., Santa Clara, California.

[267] GENESYS Software, Summary of Facilities for Engineering Application Subsystems, Genesys Limited, Loughborough, Leicestershire, United Kingdom.

[268] Carmichael, R. L. and Putnam, R., "Applications of Computer Graphics to Aircraft Synthesis." NASA Ames Research Center, Proc. Conference on the Application of Computer Graphics in Engineering, Hampton, Virginia, October 1975. Published as NASA SP-390, NASA, Washington, D. C., 1975.

[269] Lewis, A.D.M., Tiewtranon, P., and Malone, D. W., "Computer-Augmented Preliminary Design of Aircraft Wing Structures." Intl. Journal of Computers and Structures, Vol. 6, 1976, pp. 557-561.

[270] Miller, R. E., Backman, B. F., Hansteen, H. B., Lewis, L. M., Samuel, R. A., and Varnasi, S. R., "Recent Advances in Computerized Aerospace Structural Analysis and Design." Intl. Journal of Computers and Structures, Vol. 7, 1977, pp. 315-326.

[271] Wennagel, G. H., Mason, P. W., and Rosenbaum, J. D., "IDEAS, Integrated Design and Analysis System." [Reprint] 680728, Soc. Automative Engineers, October 1968.

[272] McComb, H. G., "Automated Design Methods in Structural Technology." Vehicle Technology for Civil Aviation, Conference at Hampton, Virginia, November 1971. Published as NASA SP-292, NASA, Washington, D.C., 1971.

[273] Harris, L. A., Mitchell, J. C., and Morgan, G. W., of North American Aviation Inc., "Computer-Aided Design for Civil Engineering Structures." Proc. Symposium on Technology and Trends, Huntsville, Alabama, April 1965. NASA SP-5030, NASA, Washington, D.C.

[274] Garrocq, C. A. and Hurley, M. J., "The IPAD System: A Future Management/Engineering/Design Environment." Computer, April 1975, pp. 23-33.

[275] Hughes, O.F. and Mistree, F., "An Automated Ship Structural Optimization Method." In Computer Applications in the Automation of Shipyard Operation and Ship Design, Jacobsson, et. al., Eds., North-Holland, Amsterdam, The Netherlands, June 1976, pp. 203-212.

[276] Paulling, J. R., "Input Format for DANDO." Department of Naval Architecture, University of California at Berkeley, 3 pp.

[277] Webster, W.C., "The Flow About Arbitrary Three-Dimensional Smooth Bodies." Journal of Ship Research, Vol. 19, No. 4, December 1975, pp. 206-218.

[278] Wood, P.D., "SEAWAY: Linear Ship Motion Program." Department of Naval Architecture, University of California at Berkeley, October 1973.

APPENDIX

SURVEY OF COMPUTER PROGRAMS

MARINE PROGRAMS

No.	Name	Reference	Description
			CONCEPT DESIGN
1	DDO	NAVSEA [87]	DESTROYER DESIGN SYNTHESIS. HULL FORM, POWERING, ETC. ALSO OTHER PROGRAMS FOR SUBMARINES, AUXILLIARIES, ETC. SEE REF.
2		NSRDC [88]	HULL MANIPULATION, DECKING OUT AND PROFILE GENERATION PACKAGE HYDROSTATICS.
3	SDWE	NAVSEC [89]	SHIP DESIGN WEIGHT ESTIMATION AND UPDATE.
4		NAVSEC [89]	WEIGHT, CG, INERTIA COMPUTATION FOR A SECTION.
5	FORWARD DESIGN SYSTEM	ARL, UK [14]	SURFACE DESIGN, DECKING OUT, WEIGHTS, HYDROSTATICS, STABILITY, PROPULSION, GENERAL DRAWING & PLOTTING. MINICOMPUTER.
6	COGAP	LOCKHEED/ NAVSEC [90]	INTERACTIVE GRAPHICS MINICOMPUTER SHIPS ARRANGEMENTS PROGRAM.
7	COGAP	NSRDC [91]	INTERACTIVE GRAPHICS MINICOMPUTER SHIPS ARRANGEMENTS PROGRAM. DIVIDER DESIGN.
8	SPIRAL	U.MICHIGAN [92]	INTERACTIVE SHIP DESIGN. EDUCATIONAL PURPOSES.
9	PROVIB	NAVSEC [93]	DESIGN & ANALYSIS OF PROPULSIVE SYSTEMS. TORSIONAL & VERTICAL SHAFT VIBRATION ANALYSIS.
10	(DEX)	MIT/SEA GRANT [94]	LISTS SUCCESSFUL APPLICATION PROGRAMS FOR SEAKEEPING, STABILITY, ETC. DEX IS AN EXECUTIVE SYSTEM FOR THE USE OF THESE PROGRAMS.
			1. SELECTION OF PRELIMINARY SHIP CHARACTERISTICS
11		MURPHY, SABAT & TAYLOR [15]	PARAMETRIC STUDIES AVERAGE ANNUAL COST (AAC).

BEST DOCUMENT AVAILABLE

SURVEY OF COMPUTER PROGRAMS

No.	Name	Reference	Description
12		MANDEL & LEOPOLD [95]	EXPONENTIAL RANDOM SEARCH. LEAST COST OR CAPITAL RECOVERY FACTOR (CRF).
13		GILFILLAN [96]	PARAMETRIC STUDIES. LEAST COST PER TON CARGO.
14		NOWACKI,BRUSIS & SWIFT [16]	SUMT, REQUIRED FREIGHT RATE (RFR).
15		FISHER [97]	NELDER-MEADE SEARCH, RFR.
16		KUPRAS & DE ZWAAN [98]	GRAPHICAL VISUAL SEMI-OPTIMIZATION.
			2. TRADITIONAL CALCULATIONS
17	DANDO	PAULLING [276]	HYDROSTATICS AND LONGITUDINAL STRENGTH.
18	SHCP	NAVSEC [17]	SHIP HULL CHARACTERISTICS PROGRAM. HYDROSTATICS, TRIM, STABILITY, LONGITUDINAL STRENGTH.
19	TANDS & LOADS	Y-ARD, UK [100]	TRIM & STABILITY, LONGITUDINAL STRENGTH.
20	CATAMARAN HULL	NAVSEC [89]	HYDROSTATICS OF UNUSUAL FORMS.
21	PRELIKON	DnV [28,8]	TRADITIONAL HULL FORM, STABILITY, ETC. CAN WORK INDEPENDENTLY OR OFF AUTOKON.
22	PILOT	DnV [221]	TRADITIONAL CALCULATIONS. LONGITUDINAL STRENGTH AND RULE DESIGN. DESK-TOP COMPUTER.
			3. HULL FORM DESIGN
23	HULGEN	NAVSEC [21,22]	INTERACTIVE HULL DEFINITION.
24	FORENT	ROSTOCK [101]	INTERACTIVE HULL DEFINITION. COON'S PATCHES.
25	BRITFORM	BSRA [102]	INTERACTIVE HULL FORM DESIGN.
		ACM [103]	INTERACTIVE 3D SURFACE GENERATION.

SURVEY OF COMPUTER PROGRAMS

No.	Name	Reference	Description
			DESIGN ENVIRONMENTS
26	COMRADE	NAVY [18]	DESIGN ENVIRONMENT, FILE HANDLING. DATA BASE. COMMAND LANGUAGE DEFINITION. (ISDS IS A SUBSYSTEM.)
27	DECADE	TUBERLIN [104]	DESIGN ENVIRONMENT. GRAPHICS. (OSW IS A SUBSYSTEM.)
28	BOSS	TU. TRONDHEIM [105]	DESIGN ENVIRONMENT. GRAPHICS. (INDETS IS A SUBSYSTEM.)
29	DEX	MIT/SEAGRANT [94]	EXECUTIVE FOR PRELIMINARY DESIGN.
30	IST	PAHL [106]	TECHNICAL INFORMATION SYSTEM USED FOR CAD IN GERMAN SHIPYARDS.
			GENERAL PURPOSE ANALYSIS SOFTWARE
31	FINEL	PAULLING [25,26]	LINEAR FINITE ELEMENT DISPLACEMENT METHOD (FEM). EARLY APPLICATION.
32	SESAM	DnV [104]	MOSTLY LINEAR FEM. MULTILEVEL SUPER-ELEMENT.
33	DAISY	ABS/KAMEL [108, 217]	LINEAR FEM. SUBSTRUCTURING MODEL GENERATION & EDITING, LOADS PROCESSOR.
34	GIFTS	ABS/KAMEL [2,7, 27,209,210,220]	MINICOMPUTER. GRAPHICS INTERACTIVE DATA INPUT. OUTPUT GRAPHICS. DIGITIZER. MULTILEVEL SUPER-ELEMENT. CORE RESTRICTED DESIGN.
35	MISA	MITSUI [109]	LINEAR FEM. STATIC ANALYSIS.
36	PASSAGE	NKK [110]	FEM. LARGE STRUCTURES.
37	SASMIT	MITSUBISHI [208]	FEM. LARGE STRUCTURES.
38	DASH	NETHERLANDS [111]	DYNAMIC ANALYSIS OF SHIP HULLS. FEM.
39	GIFTS/STAGS	ONR/LOCKHEED [211]	NONLINEAR LARGE DEFLECTION ELASTIC-PLASTIC ANALYSIS USING GIFTS GRAPHICS.
	(DEMAIN)	IRCN [212]	INTERACTIVE FINITE ELEMENT MODELLING TOOL FOR SHIP STRUCTURES. INTERFACEABLE WITH EXISTING FEM CODES.

SURVEY OF COMPUTER PROGRAMS

No.	Name	Reference	Description
			WAVE-INDUCED LOADS ON SHIPS
40a	SHIP MOTIONS & SEALOADS	NSRDC & DnV [28,29]	WAVE-INDUCED LOADS ON SHIPS. 6 DOF & PRESSURES AT ANY POINT.
40b	SCORES	SSC [112]	MOTIONS AND STRUCTURAL LOADS.
40c	MIT MOTION	MIT [113]	MOTIONS AND STRUCTURAL LOADS.
41	---	WEBSTER [277]	3D FLOW AROUND SMOOTH DEFORMABLE BODIES. TRIANGULAR SOURCE PARTS. STREAM LINES, PRESSURES AND ADDED MASS OF ARBITRARY BODIES UNDERGOING ARBITRARY SMALL DEFORMATIONS.
42	SEAWAY	UCB [278]	5 DOF SHIP MOTIONS & SEALOADS. LINEAR THEORY.
43	SPRING SEA	ABS [114,179]	SHEAR & BM RESPONSE INCLUDING FLEXIBILITY.
44	SLAM	NSRDC [115]	SLAMMING RESPONSE. NORMAL MODE METHOD.
45		TEXAS A&M [116]	WATER WAVE PRESSURES, FORCES. A VARIETY OF PROGRAMS USING VARIOUS WAVE THEORIES.
46		KAPLAN ET.AL. SSC [117,118]	WAVE-INDUCED VIBRATORY LOADS INCLUDING SLAMMING. SIMULATION.
47	TAUROG	E. GERMANY [119]	MOTIONS & LOADS. 5 DOF (NO SURGE).
48		DTNSRDC [120]	ASSESSMENT OF SHIP DYNAMICS PROGRAM FOR ISDS.
49	WAVE LOADS ON SHIPS PACKAGE	DnV [28]	-MOTION, LOAD, PRESSURE RAO, STRIP THEORY. -WAVE LOADS BY A 3D SOURCE-SINK METHOD ON LARGE FIXED OR FLOATING OBJECTS. -PROGRAM TO TRANSFER RAO FOR USE BY SEASAM-69. -LONG & SHORT-TERM DISTRIBUTION OF LOADS, MOTIONS. -VIBRATORY RESPONSE (BOW ACCELERATION, MIDSHIP BM) TO PIERSON SPECTRA. -WAVE SIMULATION (FLUID VEL., PRESSURE FOR SEA OF ANY DEPTH) USING SHIP RAO, CAN COMPUTE RESPONSES.

SURVEY OF COMPUTER PROGRAMS

No.	Name	Reference	Description
50	WAVE LOADS ON OFFSHORE STRUCTURES	DnV [28]	SIMILAR TO ABOVE FOR OFFSHORE FLOATING AND FIXED STRUCTURES.
51	LR.SEAS	LR.PASS [130]	SEA LOADS INCLUDING SLAMMING.
52	LR.SWASH	LR.PASS [30]	SLOSHING WAVE ANALYSIS IN SHIP HOLDS.
			RULE & DIRECT ANALYSIS & DESIGN
53	RULESCANT	ABS [121]	RULE REQUIREMENT SCANTLING DETERMINATION.
54	CBC	DnV [13]	RULE REQUIREMENT SCANTLING DETERMINATION.
55	RULE PROGRAMS	LRS [30]	RULE REQUIREMENT SCANTLING DETERMINATION. PART OF LR.PASS.
56	LR.PASS	LRS [30]	PLAN APPRAISAL SYSTEM. LOADS, CAPABILITY, CRITERIA, F. SAFETY.
	-SHIPS	[123]	HULL PRIMARY STRENGTH: DIRECT CALCULN.
	-SEAS		SEA LOADS, ETC. INCLUDING SLAMMING.
	-SWASH		SLOSHING WAVE ANALYSIS IN SHIP HOLDS.
	-SAFE	[124]	SHIP ANALYSIS BY FINITE ELEMENTS. -USES NASTRAN -WILL SOON HAVE FSD CAPABILITY.
57	RULE & SOME DIRECT CALCUL.	LRS [122]	PART OF LR.PASS. SUITABLE FOR DESK-TOP COMPUTER USE.
58	LR521	LRS [125]	INTERACTIVE GRAPHICS DATA GENERATION & CHECKING SYSTEM. GENERATE REPETITIVE GEOMETRIES EFFICIENTLY FOR ANALYSIS.
59	HULDA	DnV [31]	HULL DESIGN AND ANALYSIS PACKAGE. BOTH RULE & DIRECT CALCULATION. -DEFINE GEOMETRY & HULL MODEL. -CHECK,GENERATE RULE SECTIONS. -SHIP MOTION, SEA LOADS & PRESSURE. -TRADITIONAL LONGITUDINAL STRENGTH. -2D SHEAR FLOW & STRESS. -3D FRAME ANALYSIS. -3D FRAME OPTIMIZATION, MIN. WEIGHT. -MAX DWT BHD SPACING FOR TANKERS, SUMT.

SURVEY OF COMPUTER PROGRAMS

No.	Name	Reference	Description
60	STRUCTURAL DETAILS PACKAGE	DnV [28]	CALCULATION OF STRUCTURAL ELEMENT PROPERTIES: INERTIA, ETC.
61	TOTAL	NKK [126]	LONGITUDINAL STRENGTH ANALYSIS STRIP THEORY MOTIONS. LUMPED MASS SPRING SYSTEM. FEM.
62	MARCS	SYNERCOM, UK [127]	STRUCTURAL ANALYSIS OF OFFSHORE STRUCTURES.
	-AUTOPLAT		DATA GENERATION.
	-SEALOAD		WIND & WAVE LOAD.
	-STRAN		STATIC STRESS
	-PILEAN		PILE-SOIL ANALYSIS. LATERAL DEFL.
	-LAUNCH 3D		JACKET RESPONSE DURING LAUNCH.
	-SEASAP		PRE-PROCESSOR FOR SAP DYNAMIC MODEL. ADDED MASS COMPUTATION.
			CAN INTERFACE WITH LARGER ANALYSIS PROGRAMS.
63	SACS	ENG. DYNAMICS/ ISD [266]	VERY SIMILAR TO MARCS ABOVE.
64		NIELSEN, ET.AL. [128-130]	ESP. TANKERS. LONGITUDINAL GRILLAGE. TRANSVERSE FEM. HULL IDEALIZATIONS.

STRUCTURAL OPTIMIZATION

CLOSED FORM OPTIMIZATION

65		VEDELER [32]	DIFFERENTIAL CALCULUS TECHNIQUES

PARAMETRIC VARIATION

66		EMTELL & OVREBO [131]	LEAST WEIGHT.
67		JOHNSEN & OVREBO [132]	STUDY OF TANKER & BULKER WTS., DnV RULES.

SURVEY OF COMPUTER PROGRAMS

No.	Name	Reference	Description
	PARAMETRIC VARIATION (Cont'd)		
68		EVANS & KHOUSHY [133]	PARAMETRIC VARIATION FOR A SECTION SYNTHESIS.
69		ROTH [36]	OTHER MIT PROGRAMS FOR THE SAME PURPOSE. CALCULATES WEIGHT & COST.
70	TRANSHIP	ST. DENIS [134,135]	DESIGN OF MIDSHIP SECTION. TRANSVERSE FRAMING.
71		IN, SPAIN [136]	BULK CARRIER & SECTION SYNTHESIS. INITIAL COST & CARGO.
72	STRUCTURES (PART OF A TOTAL PRELI. DESIGN SYS.)	MOD (UK) BY DG SHIPS/LOGICA [137]	INTERACTIVE DEFINITION OF HULL SECTIONS RESPONSE TO PRIMARY AND SECONDARY LOADS INCLUDING BUCKLING. STRUCTURAL DATA BANK. INTERFACES WITH SURFACE DEFINITION, HULL SUBDIV. AND LAYOUT, PROPULSION, RESISTANCE, STABILITY, HULL FORM DEFINITION, ETC. MINICOMPUTER. GRAPHICS.
	FEASIBLE DIRECTION TECHNIQUES		
73		SCHMIT & MALLET [138]	STRUCTURAL SYNTHESIS. WEIGHT MINIZATION. ALTERNATING STEPS WITH RANDOM DIRECTION.
74		GELLATLY [139]	MIN. WEIGHT, VARIABLE GEOMETRICS, STEEPEST DESCENT & SIDE-STEP.
75		TOCHER & KARNES [140]	ZOUTENDIJK FEASIBLE DIRECTION METHOD USED AT BOEING: REDUCED # OF ANALYSES.
76		BROWN & ANG. [141]	STRUCTURAL OPTIMIZATION. GRADIENT PROJECTION, PORTAL FRAMES.
77		ABADIE [142]	FEASIBLE DIRECTION. GENERALIZED REDUCED GRADIENT TECHNIQUE.

SURVEY OF COMPUTER PROGRAMS

No.	Name	Reference	Description
	LINEARIZATION, CUTTING PLANES		
78	FRAME DESIGN	CLARKSON/ONR [143]	LINEAR PROG. FRAME DESIGN & RESIZING TWO REPORTS.
79		MOSES & ONADA [144]	WEIGHT MINIMIZATION OF GRILLAGES.
80		CORNELL, REINSCHMIDT BROTCHIE [145]	OPTIMAL DESIGN, PIECE WISE LINEARIZATION.
81		REINSCHMIDT	OPTIMAL DESIGN, PIECE WISE LINEARIZATION. DISCRETE VARIABLES.
82	OTHERS	[147-150]	MOSES, ROMSTAD & WANG, SMITH & WOODHEAD, WOODHEAD.
	PENALTY FUNCTION TECHNIQUES		
83		SCHMIDT & FOX [151]	EXTERIOR PENALTY.
84		KAVLIE, KOWALIK & MOE [152]	INTERIOR PENALTY.
85		MARCAL & GELLATLY [153]	INTERIOR PENALTY.
86		KAVLIE & MOE [154]	STATICALLY INDET. STRUCTURES: GRILLAGES, FORCE METHOD, PRODUCTION COST.
87		LUND [155]	SUMT & POWELL SEARCH. WEIGHT MINIMIZATION. TRANSVERSE FRAME.
88		KAVLIE [156]	DnV RULE CAR CARRIER. DK. DESIGN.
89		MOE & LUND [157]	COST MINIMIZATION, SUMT, TANKER.
90		MOE [158]	TANKER WEB FRAME, STRATEGY TO REDUCE FREE VARIABLES, SUMT.

SURVEY OF COMPUTER PROGRAMS

No.	Name	Reference	Description
91		MOUSSOUROS [159]	WEB FRAMES, SYMMETRIC LOADING, FEM.
92		HANSEN [160]	BEAM OPTIMIZATION. SPECIAL ELEMENT TO ACCOUNT FOR SHEAR FORCES TRANSMITTED TO TRANSVERSES BY REST OF STRUCTURE.
93	-SUMT	MIT [161]	SEQUENTIAL UNCONSTRAINED MINIMIZATION TECHNIQUE.
94	-MIDSHIP -SSDP	NSRDC [39]	MINIMUM WEIGHT MIDSHIP SECTION. SYNTHESIS, NAVY CRITERIA, MATH. OPTIMIZATION USED.
95		NEWCASTLE [126]	SYNTHESIS, NAVY CRITERIA, MATH. OPTIMIZATION USED. CRITERIA UNKNOWN. FEM.
96		ABRAHMASEN [162]	DnV CLASSIF. SOCIETY RULES & SECTION SYNTHESIS.
97		ALDWINKLE [163]	DnV CLASSIF. SOCIETY RULES & SECTION SYNTHESIS. LLOYDS.
98		ADAMCHAK [164]	SYNTHESIS BY GROSS PANEL METHOD. SUMT. VARIABLE METRIC. MINIMUM WEIGHT.
99	OSW	TUB NOWACKI [42]	INTERACTIVE OPTIMAL DESIGN APPLICATION & OPTIMIZATION STRATEGY SEPARATE. SUMT & TANGENT SEARCH.
	(OPTECH)	ICES [165]	OPTIMIZATION SOFTWARE.
100	PAN	CHANTIERS de l' ATLANTIQUE [212]	SOME PRELIMINARY STRUCTURAL DESIGN FUNCTIONS.
101	SHIPOPT	ABS [166]	STRUCTURAL DESIGN. RESPONSE, FAILURE ANALYSIS, AND OPTIMAL RE-DESIGN. FEM FOR LARGE PARTS OF THE STRUCTURE. MATHEMATICAL PROGRAMMING.
	(ACCESS-1)	UCLA [89]	FEM. STRUCTURAL WT. MINIMIZATION TRUSS, MEMBRANE & SHEAR PANEL. MATH. PROGRAMMING & A COLLECTION OF APPROX. TECHNIQUES; TAYLOR'S EXPN. REDUCTION OF FREE VARIABLES BY LINKING, ETC. STRESS & DISPLACEMENT CONSTRAINTS.

SURVEY OF COMPUTER PROGRAMS

No.	Name	Reference	Description
	BOSS SYSTEM PROGRAMS		
102	BOSS	TU. TRONDHEIM [40,41]	DESIGN ENVIRONMENT. APPLICATION PROGRAMS FOR INTEGRATED STRUCTURAL DESIGN OF TANKERS.
	-LANOPT		OPTIMUM DESIGN OF A SECTION. SUMT. WT. OR COST MINIMIZATION. DnV RULE CRITERIA.
	-KOROPT		DESIGN OF VERTICALLY CORRUG. TRANSVERSE BHDS. SUMT. WEIGHT MINIMIZATION.
	-RAMOPT		DESIGN & ANALYSIS OF STATICALLY INDETERMINATE FRAMES. SUMT. WTS.
	-GIROPT		OPTIMAL DESIGN OF STEEL GIRDERS. MIXED INTEGER PROGRAM. WT. OR COST.
			NOTE: ALL 4 USE POWELL OR ROSENBROCK SEARCH.
103	SKOPT	LUND [167,168]	SKOPT IS A GENERAL OPTIMIZATION PROGRAM. HAS BEEN USED FOR THE MIDSHIP SECTION MINIMUM WT. OPTIMIZATION. DIRECT SEARCH. SUMT. ORE CARRIER, TANKER, OBU.
104		PAPPAS & ALLENTUCH	AUTOMATED MIN. WT. SUBMERSIBLE SHELL SYNTHESIS. CONTINUOUS & DISCRETE VARIABLES GOLDEN SEARCH & DIRECT SEARCH.
105	NV 382	DnV & NIT [28]	STEEL INPLANE FRAME DESIGN. SMALL NO. OF NODES. WT. MINIMIZATION WITHIN STRESS CONSTRAINTS. T OR I SECTION MEMBER SIZE VARIED/SPECIFIED.
106	NV 384	DnV [28]	3D FRAME OPTIMIZATION. LARGE NO. OF NODES. FULLY-STRESSED DESIGN WITH EQUIVALENT STRESS CRITERION. MAY BE DIFFERENT FOR EACH NODE & LOADING CONDITION. T OR I SECTIONS.
107	CURVED GRILLAGE OPTIMIZ.	U. NEWCASTLE [216]	SIZING OF MEMBERS USING FEM. MATHEMATICAL OPTIMIZATION. MINIMUM WT.

SURVEY OF COMPUTER PROGRAMS

No.	Name	Reference	Description
	USE OF OPTIMALITY CRITERIA		
108		-BARNETT [44]	DISPLACEMENT LIMITS FOR STATICALLY DETERMINATE STRUCTURES. SINGLE LOAD.
109		-VENKAYYA [45]	UNIFORM STRAIN ENERGY DENSITY.
110		-GELLATLY & GALLAGHER [170]	FSD
		-RAZANI [171]	FSD; REL. TO MIN. WT. STRUCTURE.
111		-GELLATLY & BERKE [172]	"MIN. WT. DESIGN", BOTH STRESS & DISPLACEMENT CONSTRAINTS. STATICALLY INDET STRUCTURE. MULTIPLE LOADS.
112		-MISTREE [173]	FEM. BAR, PLANE & PLATE. TWO COUPLED CONSTRAINED OPTIMIZATION PROBLEMS FOR RE-DESIGN. MODIFICATION USING STRUCTURAL RESPONSE. COMPLEX STRUCTURE.
113		-FINIFTER & MANSOUR [46]	WEB FRAME OPTIMIZATION. MIN. WT. FSD. COARSE & FINE MESH.
	(BOEING ATLAS)	BOEING [82]	FULLY-STRESSED DESIGN.
	(LR.PASS)	LRS [30]	FSD ANTICIPATED.
	APPROX. OPTIMIZATION		
114		-BATT ET.AL. [47,174]	INDIVIDUAL SUBCOMPONENT PRE-OPTIMIZATION DATA BANK GENERATION AND SIEVE SEARCH.
115	CASDAC	NAVY [48,178]	COMPUTER-AIDED SHIP DESIGN & CONSTRUCTIO
	-CASDOS	[19]	-DETAILING.
	-ISDS	[49]	-INTEGRATED SHIP DESIGN SYSTEM.
	-CAPDAC	[176]	-PIPING DESIGN & CONSTRUCTION.
	-(PIPSLQ)	[177]	-(PIPING SIZES IN A NETWORK)
	-(WIRING)	[51]	-(COMPUTER-AIDED SHIP ELECTRICAL WIRING/ CABLE SYSTEM.

SURVEY OF COMPUTER PROGRAMS

No.	Name	Reference	Description
116	KOTEG	E. GERMANY [119]	SHIP DESIGN
	- SPAKO		-HULL GEOMETRY DEFINITION; NUMERICALL CONTROLLED DRAWINGS.
	-AUDISTA		-AUTOMATED HULL PARTS DIMENSIONING.
	-TAUROG MAKRA		-SEA LOADS
	-STABIL TORSION SESAM-69		-HULL STATICS.
	-VERSCHWI NV 461		-HULL DYNAMICS DUE TO PROP. ENGINE OR SEA.
			-STRUCTURAL WTS., CG, MATERIAL LISTS
117	GIPS	ROSTOCK [180]	GRAPHIC INTERACTIVE SYSTEM, CHECK HULL DEFINITION, NC INFORMATION, DIGITIZING.
118		KONGSBERG [181]	HULL FAIRING, VARIATION OF HULL FORM, SHELL PLATE DEVELOPMENT. HYDROSTATICS ON MINICOMPUTER.
119		TU HANNOVER [182]	SHIP DESIGN & CONSTRUCTION.
	-ARCHIMEDES		-HYDROSTATICS, STABILITY, ETC.
	-EUCLID/ STRAK		-LINES FAIRING.
	-PRAXITELES		-HULL GENERATION FROM PARENT.
	-ABWICK		-SHELL PLATE DEVELOPMENT
	-CHWARISMZ		-COMPILER PROVIDES POL FOR DESIGN. INPUT OF ALGEBRAIC EXPNS.
120	SICEN	IRCN [212]	CAD/CAM SYSTEM USED IN FRENCH SHIPYARDS.
121	ESFE/F	ROSTOCK [183]	HULL GEOMETRIC DATA. NC CONTROL INFORMATION.
122	SCAFO	ITALCANTIERI [184]	HULL GEOMETRY DEFINITION. DEFINES STRUCTURAL PARTS. STRUCTURAL DETAILING & DRAWINGS. MATERIAL PARTS LIST.
123	SSDS	BSRA [185]	PRELIMINARY SPECS. INTO DETAILED PRODUCTION INFORMATION.

SURVEY OF COMPUTER PROGRAMS

No.	Name	Reference	Description
			MANUFACTURING SYSTEMS
124	AUTOKON	AKER, NORWAY [50,175]	PRODUCTION SYSTEM. FAIRING, PARTS PROGRAMMING, NESTING, SHELL DEVELOPMENT, NC TAPES.
125	BRITSHIPS	BSRA [186]	PRODUCTION SYSTEM. FAIRING, PARTS PROGRAMMING, NESTING, SHELL DEVELOPMENT, NC TAPES. PRELIMINARY DESIGN, STEEL ORDERING.
126	SPADES	CALI, LOUISIANA [187]	LOFTING, NC TAPES FOR STEEL CUTTING.
127	STEERBEAR	KOCKUMS, SWEDEN [188]	HULL DEFINITION, SHELL EXPANSION, PARTS PROGRAMMING, NC TAPES, MATERIAL LIST.
128	FORAN	SENER, SPAIN [189]	HULL SURFACE GENERATION (NOT FAIRING), PARTS PROGRAMMING, SHELL EXPANSION.
129	VIKING	SWEDISH SHIP BUILDERS COMPUTING CR. [190]	FAIRING, PARTS PROGRAMMING, SHELL EXPANSION.
130	NASD	NKK [191]	FAIRING, NESTING, SHELL EXPANSION, DESIGN SYSTEM FOR INTERNAL STRUCTURES, NC TAPES FOR CUTTING.
131	GOLDNEST	BSRA [184]	INTERACTIVE PLATE NESTING.
132	VIP/80	VARVSINDUST -RINS DATA CENTRAL [184]	INTERACTIVE GRAPHICS FOR PARTS DESCRIPTION, NESTING, DESCRIPTION OF CUTTING PATH, GENERATION OF WORKSHOP INFORMATION.
133		MESSER-GRIESHEIM [184]	NESTING AND PARTS PROGRAMMING WITH A LIGHT PEN.
134	PANSY	NKK [184]	PLATE NESTING, LIGHT PEN.
135	G-LOFT	NKK [8]	STRUCTURAL DETAILING & PART PROGRAMMING.

SURVEY OF COMPUTER PROGRAMS

No.	Name	Reference	Description
	OTHER APPLIC. IN PRODUCTION		
136		-HUGH SMITH (GLASGOW) [13]	-AUTOMATED FRAME BENDING.
137		-CASE WESTERN [192]	-NC FRAME BENDING MIC UNDER SELF-ADAPTING COMPUTER CONTROL. AUTOKON COMPATIBILITY.
138	MAPS	MITSUI [193]	AUTOMATED PIPE SHOP. FEEDING, FLANGE FITTING, WELDING & PIPE BENDING.
139		KAWASAKI [194]	NC PLATE FORMING SYSTEM.
140	OKI-SURF	GILLMER [99]	NC INFORMATION FOR MALHINING COMPLEX 3D PARTS SUCH AS PROPELLERS.
141	LODACS	IHS, JAPAN [195]	LONGITUDINAL FRAMING DEVELOPING. SHIP FRAME DATA PROCESSING.
142	SHELL	JAPAN [196]	DATA PROCESSING FOR FABRICATION AND ASSEMBLY OF SHELL PLATING.
	PRODUCTION RELATED ANALYTICAL EFFORTS		
143		ASME [197]	METHOD FOR AUTOMATED LAYOUT OF PIPING, DYNAMIC PROGRAMING. MIN. COST.
144		TSU, JAPAN [198]	TOTAL SYSTEM FOR THE MANUFACTURE & INSTALLATION OF PIPING WITHOUT HAVING TO BUILD A MODEL.
145	CODEM	VICKERS [199]	PREPARING PIPING PRODUCTION INFORMATION.
146		JSR [200]	METHOD FOR MINIMUM TRAJECTORY PIPE ROUTING & ARRANGEMENT. DYNAMIC PROGR.
147		MT [201]	METHOD FOR SHIPBOARD PIPING ARRANGEMENT, DYNAMIC PROGRAMMING.
148		ICCAS [202]	OPTIMAL ENGINE ROOM PIPING INTERACTIVE DESIGN. DYNAMIC PROGRAMMING.

SURVEY OF COMPUTER PROGRAMS

No.	Name	Reference	Description
149		DTNSRDC [203]	RESIDUAL STRESS COMPUTATION FOR COLD FORMED MEMBERS.
150		SNAJ [204]	INCREMENTAL FEM THEORY FOR STRENGTH OF MEMBERS WITH INITIAL DEFORMATION.
151		GENERAC DYNAMICS [205]	HEAT FLOW & STRUCTURAL DISTORTION DUE TO WELDING.
152		MIT [206]	PREDICTION OF WELDING DISTORTIONS.
			MANAGEMENT INFORMATION SYSTEMS
153	SHIPYARD MIS	NAVY [52]	MANAGEMENT INFORMATION SYSTEM (MIS) FINANCIAL, INDUSTRIAL, MATERIAL, ADMINISTRATIVE.
154	SYSTEM-Q	KOCUMS [51]	MIS, ADMINISTRATIVE
155	SPCS	A&P APPLEDORE [184]	SHIP PRODUCTION CONTROL. CORPORATE PLANNING & OUTFIT MATERIAL CONTROL.
156		SHIP RESEARCH INSTITUTE (NORWAY) [184]	INTERACTIVE PROJECT & PRODUCTION MANAGEMENT.
157	SPARDIS	NATIONAL STEEL & SHIPBLDG., SAN DIEGO [207]	SCHEDULING PLANNING & REPORTING DATA INFORMATION SYSTEM.
			GENERAL MARINE RELATED SOFTWARE
158	MANY PROGRAMS	NTIS [224]	SOFTWARE PERTAINING TO SHIP HULL & PROPELLER DESIGN, SHIP HYDRODYNAMICS, ETC.
159	MANY PROGRAMS	W. GERMANY [225]	SURVEY OF STRUCTURAL ANALYSIS AND DESIGN SOFTWARE AVAILABLE IN WEST GERMANY.
160	MANY PROGRAMS	ICCAS [226]	MANY COMPUTER-AIDED DESIGN AND MANUFACTURING SYSTEMS ARE DESCRIBED.

SURVEY OF COMPUTER PROGRAMS

CIVIL ENGINEERING PROGRAMS

No.	Name	Reference	Description
			USE OF COMPUTERS IN CE STRUCTURES
1	GISMO	AMMAN & WHITNEY, 1959 [53]	GENERAL INTERPRETIVE SCHEME FOR MATRIX OPERATIONS.
2	FRAN	IBM [53]	SPACE FRAME ANALYSIS.
3	STRESS	MIT [54,258]	STRUCTURAL ENG. PROBLEM SOLVER, POL.
4	STRUDL	MIT [55]	STRUCTURAL DESIGN LANGUAGE, POL.
			SOME POL'S
5	COGO	MIT [53,165]	COORDINATE GEOMETRY, EARLY POL.
6	SMIS	BERKELEY [227]	SYMBOLIC MATRIX INTERPRETIVE SYSTEM.
7	CAL	BERKELEY [228]	COMPUTER ANALYSIS LANGUAGE, POL. MINICOMPUTER.
8	EMOI	U. OF COLORADO [229]	SMIS EXTENDED VERSION.
9	EISPACK	ARGONNE [215]	MATRIX EIGEN VALUE/VECTOR PACKAGE.
10	ICES	MIT/USERS [165]	SUBSYSTEMS INCLUDE (ALL POLS).
	-COGO		-COORDINATE GEOM. HWY. ENGG.
	-STRUDL		-STRUCTURAL DESIGN.
	-TABLE		-ICES FILE STORAGE & MANIPULATION.
	-SEPOL		-SETTLEMENT PROBLEMS.
	-ROADS		-ROADWAY ANALYSIS, EXCAVATION, ETC.
	-TRANSNET		-TRANSPORTATION FLOW NETWORK ANALYSIS.
	-DODO TRANS.		-MULTIMODAL (AUTO, RAIL, ETC.) TRANSPORTATION ANALYSIS.
	-BRIDGE		-RC BRIDGE DESIGN SYSTEM. SINGLE & CONTINUOUS SPANS.
	-PROJECT		-PROJECT PLANNING INFORMATION, CPM NETWORK ANALYSIS.

SURVEY OF COMPUTER PROGRAMS

No.	Name	Reference	Description
	-OPTECH		-OPTIMIZATION TECHNIQUES.
	-LEASE		-STABILITY OF SLOPES & EMBANKMENTS.
	-TRAVOL		-TRAFFIC VOLUME DATA SYSTEM.
	-TOPOLOGY		-AUTOMATED GENERATION OF STRUCTURAL TOPOLOGY.
	-UGH		-URBAN GEOMETRY HEURISTICS LIKE COGO. LAND AREA DIVISIONS, ETC.
			GENERAL STRUCTURES RELATED SOFTWARE
11	MANY PROGRAMS	ARGONNE [215]	NATIONAL ENERGY SOFTWARE CENTER. PROGRAMS FOR EIGEN ANALYSIS, PIPING ANALYSIS, LINEAR ELASTIC STATIC & DYNAMIC FEM, ANALYSIS OF SHELLS.
12	MANY PROGRAMS	NAS [222]	PROGRAMS FROM THE DEPT. OF NAVY, NASA, AIRFORCE DIRECTORATE OF CIVIL ENGINEERING, USCG CIVIL ENGG. DIVISION, NATIONAL BUREAU OF STANDARDS. PROGRAMS OF INTEREST MOSTLY STRUCTURAL ANALYSIS AND CIVIL ENGG. CONSTRUCTION ORIENTED.
13	MANY PROGRAMS	PERRONE & PILKEY [223]	STRUCTURAL MECHANICS SOFTWARE SURVEY, ASSESSMENT AND AVAILABILITY.
			GENERAL PURPOSE ANALYSIS SOFTWARE
			1. ENGINEERED FEM SYSTEMS
	(NASTRAN)	NASA [81]	FEM SUBSTRUCTURING. FSD. SOME MODULARITY WELL-PLANNED DATA STRUCTURES.
14	ASKA	STUTTGART [58]	FEM. ENGINEERED SYSTEM. SUBSTRUCTURING HAS FEATURES OF A MODULAR PROG. SYSTEM.
15	NORSAM	NORWAY [230]	FEM. MODULAR PROGRAMMING SYSTEM.
16	TOPAS	IKOSS/STUTTGART [231]	FEM. MODULAR PROGRAMMING SYSTEM. MINICOMPUTER.

SURVEY OF COMPUTER PROGRAMS

No.	Name	Reference	Description
			2. OTHER ANALYSIS PROGRAMS MOSTLY LINEAR FEM
	THE SAP GROUP		
17	SOLID SAP	UCB [60]	FEM. LINEAR STATIC.
	MSAP	U.MICHIGAN [232]	SOLID SAP.
	SAP IV	UCB [59]	FEM. LINEAR STATIC & DYNAMIC.
	PREMSAP	U.MICHIGAN [218]	INTERACTIVE PRE-PROCESSOR FOR MSAP.
	MSA PLOT	U.MICHIGAN [233]	PLOT POST-PROCESSOR FOR MSAP.
	SEASAP	MARCS [127]	SEA LOAD PRE-PROCESSOR FOR SAP 4.
	NONSAP	UCB [61]	NONLINEAR STRUCTURAL ANALYSIS. FEM.
18	STARDYNE	MRI/CDC [234]	FEM. STATIC & DYNAMIC LINEAR.
19	SUPERB	SDRC, OHIO [235]	FEM. LINEAR STATIC & DYNAMIC. ALL GENERAL ISOPARAMETRIC ELEMENTS. PASSIVE GRAPHICS. NASTRAN INTERFACE.
20	ANSYS	SWANSON [236]	STATIC & DYNAMIC LINEAR FEM. SMALL STRAIN PLASTICITY. MINICOMPUTER.
21	EASE	PICKEY, CDC [223]	FEM. FEWER ELEMENTS.
22	MATUS	ARGONNE/BAPL [215]	FEM. ELASTIC.
23	FRAME ANALYSIS	GENESYS [267]	PLANE, FRAME, GRILLAGE, OR SPACE FRAME ANALYSIS WITH COORDINATE CHECKING & PLOTTING.
24	CIRC TANK	GENESYS [267]	ANALYSIS OF CONCRETE CIRCULAR TANKS. CAN BE USED FOR STEEL TANKS.
25	INFLUENCE LINES	GENESYS [267]	CALCULATION OF INFLUENCE LINES FOR LIVE LOAD INVESTIGATION. BRIDGES AND OTHER STRUCTURES.
			3. MOSTLY NONLINEAR FEM.
26	NONSAP	UCB [61]	NONLINEAR SAP. FEM. LARGE DISPLC. STRAINS. NONLINEAR MATERIAL BEHAVIOR.

SURVEY OF COMPUTER PROGRAMS

No.	Name	Reference	Description
27	ANSR	UCB [237]	NONLINEAR FEM. ELEMENT LEVEL NONLINEARITIES & DISPL., STRAIN, MATERIAL BEHAVIOR.
28	ULARC	UCB [238]	SMALL DISPLACEMENT ELASTO-PLASTIC PLANE FRAME ANALYSIS.
29	DRAIN-2D	UCB [239]	DYNAMIC RESPONSE OF INELASTIC 2D STRUCTURES DUE TO EARTHQUAKE.
30	AGGIE-I	TEXAS A&M [89]	FEM. NONLINEAR STRUCTURAL ANALYSIS. LARGE DISPL., LARGE STRAIN, & NONLINEAR MATERIAL BEHAVIOR. 2 & 3D ISOPARAMETRIC ELEMENTS. STATIC & DYNAMIC.
31	MARC	BROWN U. [240]	FEM. ELASTIC & NONLINEAR STATIC ELASTIC PLASTIC & CREEP ANALYSIS.
	(STAGS)	LOCKHEED PALO ALTO [211]	STRUCTURAL ANALYSIS OF GENERAL SHELLS. NONLINEAR COLLAPSE ANALYSIS, BIFURCATION BUCKLING AND POST-BUCKLING BEHAVIOR.
			4. FEM THAT ARE PART OF INTEGRATED SYSTEMS
	(STRUDL)	ICES [55, 165]	FINITE ELEMENT SOFTWARE. PART OF AN INTEGRATED SYSTEM.
32	SUSAN	GENESYS [241]	FINITE ELEMENT SOFTWARE. PART OF AN INTEGRATED SYSTEM.
33	FINITE	POLO [242]	FINITE ELEMENT SOFTWARE. PART OF AN INTEGRATED SYSTEM.
			GRAPHICS FOR STRUCTURAL ANALYSIS
34	SIGS	SANDIA [63]	INTERACTIVE GRAPHICS. MESH GENERATION, EDITING, RESULTS DISPLAY FOR 3D STRUCTURES.
35	GIRAFFE	CDC [63]	INTERACTIVE GRAPHICS. MESH GENERATION, EDITING, RESULTS DISPLAY FOR 3D STRUCTURES. ALSO "NEUTRAL ELEMENTS" DEFINE THE TYPE OF ELEMENTS.

SURVEY OF COMPUTER PROGRAMS

No.	Name	Reference	Description
	(GIFTS)	KAMEL [2,7,27]	FEM SYSTEM. EXTENSIVE GRAPHICS INCLUDING A DIGITIZING CAPABILITY FOR MODEL GENERATION.
36	MOVIE.BYU	BYU [213]	COMPUTER GRAPHICS SYSTEM FOR THE DISPLAY AND MANIPULATION OF DATA. LINE DRAWING & CONTINUOUS TONE DISPLAY. USED BY SHIPYARDS.
37	MOVIE.ARIZONA	BYU [213]	COMPUTER GRAPHICS SYSTEM FOR THE DISPLAY AND MANIPULATION OF DATA. LINE DRAWING & CONTINUOUS TONE DISPLAY. USED BY SHIPYARDS. MINICOMPUTER.
		U.OLD DOMINION [219]	FOR FEM RESULTS DISPLAY.
	(LR521)	LRS [125]	INTERACTIVE GRAPHICS, DATA GENERATION & CHECKING SYSTEM. GENERATE REPETITIVE GEOMETRICS EFFICIENTLY FOR ANALYSIS.
38	TOPOLOGY	ICES [165]	AUTOMATED GENERATION OF STRUCTURAL TOPOLOGY.
39	DRAW1	GIBBS & COX [243]	AUTOMATED GENERATION, POSITIONING, DIMENSION, DISPLAY OF 3D OBJECTS, DRAFTING. STRUCTURAL MODELS. POL.
40	DEMAIN	IRCN [212]	INTERACTIVE FINITE-ELEMENT MODELLING TOOL, ESP. FOR SHIP STRUCTURES. CAN INTERFACE EXISTING FEM CODES.
41	STAGING	BATELLE [214]	INTERACTIVE GRAPHICS SYSTEM FOR MESH GENERATION & EDITING: A GENERATED INTERFACE TO MANY FINITE-ELEMENT PROGRAMS.
42	AIDS	BATELLE [214]	MODEL GENERATION, EDITING, DISPLAY OF ANALYSIS RESULTS.
43	SYSTRID 1	BATELLE [214]	DESIGN ORIENTED INTERACTIVE GRAPHICS SYSTEM FOR COMPLEX SURFACES. SURFACE GENERATION, DRAFTING, NC TAPES.

SURVEY OF COMPUTER PROGRAMS

No.	Name	Reference	Description
			MINICOMPUTERS IN STRUCTURAL ANALYSIS
			SEE GRAPHICS SYSTEMS.
	(GIFTS)	KAMEL [2,7,27]	LINEAR ELASTIC FEM.
	(ANSYS)	SWANSON [236]	LINEAR ELASTIC FEM. ALSO SMALL STRAIN PLASTICITY.
	SNAP	(LOCKHEED)/NASA [6]	LINEAR FEM.
	(TOPAS)	IKOSS/STUTTGART [231]	FEM. MODULAR PROGRAMMING SYSTEM.
			ARTIFICIAL INTELLIGENCE IN STRUCTURAL ANALYSIS
44	SACON	STANFORD U. [244]	CONSULTANT FOR GENERAL PURPOSE STRUCTURAL ANALYSIS SOFTWARE USAGE. SITUATION-ACTION RULES KEPT INDEPENDENT OF THE "INFERENCE ENGINE".
			SOME INTEGRATED SYSTEMS/DESIGN ENVIRONMENT
			THESE SYSTEMS PROVIDE USUALLY A DATA BASE & MANAGEMENT SYSTEM, CONTROL FOR THE VARIOUS SUBSYSTEM EXECUTION & INTERACTION, A COMMAND LANGUAGE DEFINITION & INTERPRETATION. GRAPHICS.
45	PLAN	IBM [53]	PROBLEM LANGUAGE ANALYZER.
	(DECADE)	TUB/IBM [104]	DESIGN ENVIRONMENT, SHIP DESIGN.
	(BOSS)	TU.TRONDHEIM [40,41]	DESIGN ENVIRONMENT, SHIP DESIGN. HAS A TANKER STRUCTURAL DESIGN SUBSYSTEM. NO CI/CD CAPABILITY. INTEGRATES PROGRAMS.
46	POLO	LOPEZ [57]	POL ORGANIZER. HAS A FEM SUBSYSTEM.
47	GENESYS	UK [56]	DESIGN ENVIRONMENT.
48	ICES	MIT [20]	DESIGN ENVIRONMENT.

SURVEY OF COMPUTER PROGRAMS

No.	Name	Reference	Description
49	FEMALE	SIA, LONDON [245]	COMMON INTERFACE FOR STRUCTURAL ANALYSIS PROGRAMS. DEFINE DATA BASE OF ALL PERTINENT INFORMATION; METHODS OF EDITING IT; ONLINE DEFINITION FOR DATA INPUT & COMMON BETWEEN MODULES OF SYSTEM.
			FINITE ELEMENTS FOR BRIDGE APPL.
50		DAVIS, SOMMERVAILE, ZIENKIEWICZ [65]	TYPES OF ELEMENTS FOR BRIDGE APPLICATIONS.
			1. CURVED BRIDGES, MOSTLY U. OF MARYLAND
51		HEINS & LOONEY [246]	CURVED ORTHOTROPIC BRIDGE ANALYSIS BY FINITE DIFFERENCES.
52		HEINS [247]	SLOPE DEFL. METHOD FOR CURVED GIRDER ANALYSIS.
53		BELL & HEINS [248]	SLOPE DEFLECTION FOURIER SERIES FOR CURVED GIRDER ANALYSIS.
54		HEINS & OLENIK [249]	BOX BEAM BRIDGES BY FINITE DIFFERENCE INCLUDING DIAPHRAGM FLEXIBILITY.
55		HEINS & STROCZKOWSKI [250]	FOR TUBULAR GIRDERS. FINITE DIFFERENCE.
56	CUGAR	U. RHODE ISL. [251]	STIFF. MATRIX. LINEAR ELASTIC PLANAR GRID.
57	CURVBRG	UCB [252]	CURVED OPEN GIRDER BRIDGES. STIFFNESS FORMULATION.
58	CURSYS	HEINS & YOO U. MARYLAND [253]	MULTISPAN CURVED GIRDER BRIDGE. FINITE DIFFERENCE. MATRIX STIFF. FOR DIAPHRAGMS. OPEN I GIRDERS.
59	MANY PROGRAMS	FHA [254]	FHA SPONSORED CURVED GIRDER WORKSHOP. LISTS MANY COMPUTER PROGRAM ABSTRACTS AND REFERENCES.

No.	Name	Reference	Description
68	GAD III	CASE WESTERN [69]	GIRDER AUTOMATED DESIGN. AASHTO SPECS. RANDOM SEARCH & DYNAMIC PROGRAMMING. MIN. COST, NON-COMPOSITE CONTINUOUS ROLLED BEAMS.
	-GAD VI		GIRDER AUTOMATED DESIGN. AASHTO SPECS. RANDOM SEARCH & DYNAMIC PROGRAMMING. MIN. COST NON-COMPOSITE CONTINUOUS COMPOSITE BEAM.
	-GAD IV		MIN. COST CONTINUOUS RC SLAB BRIDGES.
69	HECB DESIGN PROGRAMS	UK GOVT. GENESYS [70,71]	DESIGN OF SIMPLY SUPPORTED AND CONTINUOUS SKEW OR CURVED SLAB BRIDGE DKS. FEM & FSD. SOLID & VOIDED CONSTRUCTION. PRESTRESSED OR RC.
70	BRIDGE	ICES [165]	BRIDGE DESIGN SYSTEM SPAN ARRANGEMENT. RC DESK DESIGN. PRELIMINARY DESIGN OF SINGLE & CONTINUOUS SPAN BRIDGES.
71	BRIDGE	GENESYS [267]	ANALYSIS OF STRAIGHT BRIDGES AS CONTINUOUS BEAMS.
72	SLAB-BRIDGE	GENESYS [267]	FINITE ELEMENT ANALYSIS OF BRIDGE DECKS WITH MESH PLOTTING FACILITIES.
			ANALYSIS PROGRAMS FOR BUILDINGS
73		CEPA [257]	ANALYSIS. SINGLE STOREY. MOMENT DISTRIBUTION.
74	STRESS	MIT [54,258]	ANALYSIS. MATRIX CALLING POL. HAS BEEN USED EXTENSIVELY FOR BUILDINGS.
75	EASE	PILKEY, ET.AL., CDC [223]	FEM. HAS BEEN USED. ANALYSIS.
76	MLSTOANA	CDC [259]	ANALYSIS. 2D FRAMES OF ANY GENERAL CONSTRUCTION. SLOPE DEFLECTION.
77	TABS	UCB [72]	THREE-DIMENSIONAL ANALYSIS OF BUILDING SYSTEMS. LINEAR ANALYSIS OF FRAME & SHEAR WALL BUILDINGS SUBJECT TO STATIC & EARTHQUAKE LOADS. SP. FEM.

No.	Name	Reference	Description
			2. BOX BRIDGE EFFORTS (MOSTLY UCB)
60	-MULTPL	UCB [68]	DIRECT STIFFNESS HARMONIC ANALYSIS. OPEN OR CELLULAR FOLDED PLATE STRUCTURE, SINGLE SPANS.
61	-MUPDI	UCB [68]	DIRECT STIFFNESS HARMONIC ANALYSIS. OPEN OR CELLULAR FOLDED PLATE STRUCTURE, SINGLE SPANS. RIGID INTERIOR DIAPHRAGMS.
62	-MLTSTR	UCB [68]	DIRECT STIFFNESS HARMONIC ANALYSIS. OPEN OR CELLULAR FOLDED PLATE STRUCTURE, SINGLE SPANS. FINITE STRIP METHOD.
63	-CURSTR	UCB [68]	DIRECT STIFFNESS HARMONIC ANALYSIS. OPEN OR CELLULAR FOLDED PLATE STRUCTURE, SINGLE SPANS. FINITE STRIP CURVED BRIDGES.
64	-CELL	UCB [68]	SP* FEM. ARBITRARY PLAN GEOMETRY CONST. DEPH., 2 DKS & WEB. ARBITRARY LOADS AND BOUNDARY CONDITIONS.
65	-FINPLA2	UCB [68]	SP FEM. ARBITRARY PLAN GEOMETRY CONST. DEPH., 2DKS & WEB. ARBITRARY LOADS & BOUNDARY CONDITIONS. AN INTEGRATED 3D FRAME IN ADDITION.
66	-CBRIDG	FAM & TURKSTRA [255]	SP FEM. STATIC & FREE VIBR. ANALYSIS OF BOX BRIDGES WITH ORTHOG. BOUNDARIES.
			BRIDGE DESIGN
67	DEVAST	U.TORONTO [256]	DESIGN BY VARIABLE ANGLE SPACE TRUSS FOR DESIGN OF REINFORCING STEEL (RC OR PS CONCRETE). DESIGN CRITERIA IS REINFORCEMENT YIELD.

*SP = Special Purpose.

No.	Name	Reference	Description
78	ETABS	UCB [260]	3D ANALYSIS OF BUILDING SYSTEMS. LINEAR ANALYSIS OF FRAME & SHEAR WALL BUILDINGS SUBJECT TO STATIC & EARTHQUAKE LOADS. SP. FEM. DIAGONAL BRACES.
79	SUBWALL	UCB [261]	SP. FEM. LINEAR ANALYSIS AND DESIGN OF CONCRETE WALLS. ARBITRARY INPLANE STATIC LOADS. SUBSTRUCTURING.
80	DR.TABS	UCB [73]	INELASTIC DYNAMIC RESPONSE OF 3D BUILDINGS TO GROUND MOTIONS. SPECIAL PURPOSE (SP) FEM.
81	SAKE	U. ILLINOIS [262]	INELASTIC BEHAVIOR OF MULTISTORY RC FRAME STRUCTURE TO DNG. DIRECTIONAL EARTH MOTIONS.
82	UBM	GENESYS [267]	ULTIMATE BENDING MOMENT AND AXIAL LOAD OF ANY CONCRETE CROSS SECTION.
83	SHEAR-WALL	GENESYS [267]	2D ANALYSIS OF SHEAR WALLS.
84	SUBFRAME	GENESYS [267]	ANALYSIS OF ANY CONTINUOUS BEAM & STIFFNESS OF SUPPORTING COLUMNS.
85	SHOCHU	UCB [263]	NONLINEAR RESPONSE SPECTRA FOR PROBABILISTIC SEISMIC DESIGN & DAMAGE ASSESMENT OF RC STRUCTURES.
86	DAEM	NBS [264]	EVALUATION METHOD FOR NATURAL HAZARDS OF EXISTING BUILDINGS. EARTHQUAKE, WIND, TORNADO. ANYWHERE USA.
			BUILDING DESIGN
	(STRUDL)	ICES [55]	FEM HAS BEEN USED. AISC & ACI CODES.
87	AISC & PCA MEMBER SELECTION PROGRAMS	AISC [77] PORTLAND	TAKE MEMBER DIMENSIONS & LOADS FROM ANALYSIS. SELECT MEMBERS ACCORDING TO AISC, ACI.
88	CD FRAME	U. COLORADO [78]	PLANE FRAME ANALYSIS. INTERACTIVE GRAPHICS. STEEL BLDG. FRAMES, FSD, POL.

No.	Name	Reference	Direction
89	STFRD	U. OF MARYLAND [259]	MULTISTORY STRUCTURES. FRAME ANALYSIS. AISC CODES, REDESIGN IF SIZES INADEQUATE. FSD.
90	STRUC 5	OMNIDATA [265]	2D FRAMES. ANY CONSTRUCTION. AISC, ACI CODES. AUTOMATIC REANALYSIS, MEMBER SELECTION.
91	RC BUILDING	GENESYS [79,267]	DESIGN, DETAILING, & SCHEDULING SYSTEM. BEAMS, COLUMNS, SLABS. SCHEDULE FOR BAR FIXING, ETC. BS CODES. DETAILING GIVES DRAWINGS.
92	CP 110-BUILDING SUITE	GENESYS [79,267]	DESIGN & DETAILING OF RC BUILDING, INCLUDING FLAT SLABS AND WAFFLE SLABS TO BRITISH STANDARD CP 110.
93	CP 110-BEAMS	GENESYS [79,267]	ANALYSIS, DESIGN AND DETAILING OF CONTINUOUS BEAMS TO CP 110.
94	PORTAL-FRAME	GENESYS [79,267]	DESIGN OF SINGLE STORY MULTIBAY STEEL FRAMES.
95	COMP-CONSTRUCT	GENESYS [79,267]	ANALYSIS, DESIGN AND DETAILING OF RC SLABS AND STEEL BEAMS.
96	MANY PROGRAMS	KRUEGER [259]	COMPARISON OF SOME BUILDING DESIGN PROGRAMS.

SURVEY OF COMPUTER PROGRAMS

AEROSPACE PROGRAMS

No.	Name	Reference	Description
			CONCEPT DESIGN
1	ACSYNT	NASA [268]	AIRCRAFT SYNTHESIS.
			SOME ANALYSIS SOFTWARE
2	NASTRAN	NASA [81]	FSD. SUBSTRUCTURING LIMITED. SOME NONLINEAR CAPABILITY.
3	SNAP	LOCKHEED [6]	FEM. STRUCTURAL ANALYSIS.
4	ASTRAL	GRUMMAN [80]	FEM. STRUCTURAL ANALYSIS.
	(ASKA)	STUTTGART/ ROCKWELL [58]	FEM. STRUCTURAL ANALYSIS.
5	SAMIS	JPL & NASA [89]	STRUCTURAL ANALYSIS & MATRIX INTERPRETIVE SYSTEM.
6	BUCLASP	BOEING [89]	UNIAXIAL COMPRESSIVE BUCKLING LOADS OF ORTHOTROPIC LAMINATED STIFFENED PLATES.
	-BUCLASP 2	BOEING [89]	COMBINED INPLANE LOADS FOR ABOVE.
7	STAGS -STAGS/GIFTS	LOCKHEED -ONR [211]	NONLINEAR LARGE DEFLECTION ELASTIC PLASTIC ANALYSIS. ONE EFFORT USES GIFTS GRAPHICS. ANALYSIS OF GENERAL SHELLS NONLINEAR COLLAPSE ANALYSIS, BIFURCATION BUCKLING AND POST-BUCKLING BEHAVIOR.
8	SPAR	ENGG. INF. SYS/ NASA [89]	STRUCTURAL ANALYSIS OF LARGE FEM. BATCH & INTERACTIVE AERODYNAMIC ANALYSIS. GRAPHICS. MINICOMPUTER. MODULAR ENGINEERING PACKAGE & MATRIX MANIPULATION, DATA BASE & ANALYSIS UTILITIES.

SURVEY OF COMPUTER PROGRAMS

No.	Name	Reference	Description
9	SUDAN	NASA [89]	SUBSTRUCTURING IN DIRECT ANALYSIS TO DETERMINE VIBRATION MODES & FREQ. OF STRUCTURAL SYSTEMS. TRANSFORM BODY INTO LUMPED MASS & SPRINGS INTERCONNECTED BY BEAMS.
10	VISCEL	CALTECH/JPL [89]	ANALYSIS OF LINEAR VISLOELASTIC STRUCTURES. FEM. DISPLACEMENTS OBTAINED BY A POTENTIAL ENERGY MINIMIZATION.
11	TAP 1	OLD DOMINION UNIV. [89]	FEM. STEADY STATE THERMAL ANALYSIS OF CONVECTIVELY COLLED STRUCTURES.
12		TEXAS A&M [89]	STIFFNESS & MASS; STATIC & DYNAMIC ANALYSIS; FREQUENCY & MODE SHAPES. MODULES FOR SHELLS OF REVOLUTION.
13	VARIOUS PROGRAMS	McCOMB [80]	LIST OF FINITE ELEMENT ANALYSIS PROGRAMS IN USE IN VARIOUS AEROSPACE COMPANIES.
			STRUCTURAL DESIGN SYSTEMS
14		PURDUE [269]	PRELIMINARY DESIGN OF AIRCRAFT WING STRUCTURES. BOX COMPLEX OPTIMIZATION. FEM. MIN. WEIGHT.
15	ATLAS	BOEING [82,270]	STRUCTURAL ANALYSIS & RE-DESIGN. FSD.
16	IDEAS	GRUMMAN [271]	STRUCTURAL ANALYSIS & RE-DESIGN. FSD.
17	DAWNS	NASA [272]	DESIGN OF AIRCRAFT WING STRUCTURE. FSD.
18	SAVES	NASA [272]	FUSELAGE & FUSELAGE WING COMBINATION. FSD.
19	SWIFT	NASA [272]	COMBINED STRENGTH AND FLUTTER DESIGN OF AIRCRAFT WING STRUCTURES. MATH. PROGRAMMING.
20	ISSAS	ISRAEL AIRCRAFT [83]	INTERACTIVE STRUCTURAL SIZING & ANALYSIS. WING & FUSELAGE STRUCTURES. FSD. DLD.
21	APAS III	GENERAL DYN/ CONVAIR DIV. [89]	AUTOMATED PRE-DESIGN OF AIRCRAFT STRUCTURE. MIN. WEIGHT. MULTICELL BOX BEAM SYNTHESIS.

SURVEY OF COMPUTER PROGRAMS

No.	Name	Reference	Description
			INTEGRATED DESIGN SYSTEMS
22	LAUNCH VEHICLE WEIGHT SYNTHESIS	NASA [273]	PRELIMINARY DESIGN; WEIGHT SYNTHESIS OF MULTISTAGE LAUNCH VEHICLES. MIN. WEIGHT DESIGN.
23	IPAD	NASA [84,274]	INTEGRATED PROGRAMS FOR AEROSPACE VEHICLE DESIGN.
24	EDIN	NASA [85]	ENGG. DESIGN INTEGRATION SYSTEM. TECHNOLOGY ORIENTED PROGRAMS FOR ALL ASPECTS OF FLIGHT VEHICLE CHARACTERISTICS.
			CAD/CAM SYSTEMS
25	CAT	MCDONNEL [86]	COMPUTER-AIDED TECHNOLOGY PROJECT.
	-CADD		-DESIGN DRAFTING.
	-ICADE		-DESIGN EVALUATION INTERACTION.
	-CALL		-LOFTING LINES.
	-CGSA		-COMPUTER GRAPHICS, STRUCTURAL ANALYSIS.
	-GNG		-GRAPHIC NUMERICAL CONTROL.
	-CGQA		-QUALITY ASSURANCE.
	-CASD		-COMPUTER-AIDED STRUCTURAL DESIGN, DEVELOPED BY MCDONNEL PRIOR TO NASA'S NASTRAN.
26		BRITISH AIRCRAFT, SIKORSY [63]	TWO OTHER CAD/CAM SYSTEMS.

SHIP RESEARCH COMMITTEE
Maritime Transportation Research Board
National Academy of Sciences - National Research Council

****

The Ship Research Committee has technical cognizance of the interagency Ship Structure Committee's research program:

Mr. A. D. Haff, Chairman, *Consultant, Annapolis, MD*
Prof. A. H.-S. Ang, *Civil Engrg. Dept., University of Illinois, Champaign, IL*
Mr. A. C. McClure, *Alan C. McClure Associates, Inc., Houston, TX*
Dr. W. R. Porter, *Vice President for Academic Affairs, State Univ. of New York Maritime College*
Mr. D. A. Sarno, *Manager-Mechanics, ARMCO Inc., Middletown, OH*
Prof. H. E. Sheets, *Dir. of Engineering, Analysis & Technology, Inc., Stonington, CT*
Mr. J. E. Steele, *Naval Architect, Quakertown, PA*
Mr. R. W. Rumke, *Executive Secretary, Ship Research Committee*

****

The Ship Design, Response, & Load Criteria Advisory Group prepared the project prospectus, evaluated the proposals for this project, provided the liaison technical guidance, and reviewed the project reports with the investigator:

Mr. J. E. Steele, Chairman, *Naval Architect, Quakertown, PA*
Mr. J. W. Boylston, *Manager, Marine Operations, El Paso Marine Co., Solomons, MD*
Mr. L. R. Glosten, *L. R. Glosten Associates, Inc., Seattle, WA*
Mr. P. M. Kimon, *Exxon International Co., Florham Park, NJ*
Mr. P. W. Marshall, *Civil Engrg., Advisor, Shell Oil Co., Houston, TX*
Dr. O. H. Oakley, Jr., *Project Engineer, Gulf R&D Company, Houston, TX*
Prof. R. Plunkett, *Dept. of Aerospace Engrg. & Mechanics, Univ. of Minnesota*

27 BEST DOCUMENT AVAILABLE

SHIP STRUCTURE COMMITTEE PUBLICATIONS

These documents are distributed by the National Technical Information Service, Springfield, VA 22314. These documents have been announced in the Clearinghouse Journal U. S. Government Research & Development Reports (USGRDR) under the indicated AD numbers.

SSC-287, *Examination of Service and Stress Data of Three Ships for Development of Hull Girder Load Criteria* by J. F. Dalzell, N. M. Maniar, and M. W. Hsu. 1979. AD-A072910.

SSC-288, *The Effects of Varying Ship Hull Proportions and Hull Materials on Hull Flexibility Bending and Vibratory Stresses* by P. Y. Chang. 1979. AD-A075477.

SSC-289, *A Method for Economic Trade-Offs of Alternate Ship Structural Materials* by C. R. Jordan, J. B. Montgomery, R. P. Krumpen, and D. J. Woodley. 1979. AD-A075457.

SSC-290, *Significance and Control of Lamellar Tearing of Steel Plate in the Shipbuilding Industry* by J. Sommella. 1979. AD-A075473.

SSC-291, *A Design Procedure for Minimizing Propeller-Induced Vibration in Hull Structural Elements* by O. H. Burnside, D. D. Kana, and F. E. Reed. 1979. AD-A079443.

SSC-292, *Report on Ship Vibration Symposium '78 - Sheraton National Hotel, Arlington, VA.* by E. Scott Dillon. 1979. AD-A079291.

SSC-293, *Underwater Nondestructive Testing of Ship Hull Welds* by R. Youshaw and C. Dyer. 1979. AD-A079445.

SSC-294, *Further Survey of Inservice Performance of Structural Details* by C. R. Jordan and L. T. Knight. 1979. AD-A086019.

SSC-295, *Nondestructive Inspection of Longitudinal Stiffener Butt Welds in Commercial Vessels* by R. A. Youshaw. 1980. AD-A085352.

SSC-296, *Review of Fillet Weld Strength Parameters for Shipbuilding* by C-L Tsai, K. Itoga, A. P. Malliris, W. C. McCabe, and K. Masubuchi. 1980. AD-A085356.

SSC-297, *Evaluation of Liquid Dynamic Loads in Slack LNG Cargo Tanks* by P. A. Cox, E. B. Bowles, and R. L. Bass. 1980.

SSC-298, *Investigation of Steels for Improved Weldability in Ship Construction - Phase I* by R. W. Vanderbeck. 1980.

SSC-299, *Ultimate Strength of a Ship's Hull Girder in Plastic and Buckling Modes* by A. E. Mansour and A. Thayamballi. 1980.

SSC-300, *Summary of Nondestructive Inspection Standards for Heavy Section Castings, Forgings, and Weldments* by R. A. Youshaw. 1980.

SSC-301, *Probabilistic Structural Analysis of Ship Hull Longitudinal Strength* by J. C. Daidola and N. S. Basar. 1981.

128 BEST DOCUMENT AVAILABLE