QUALITY NOTICE

Scanned documents may contain illegible text or poor quality graphics. These documents were the highest quality available.

COPYRIGHT DISCLAIMER

© Materials may be protected by copyright, Title 17 of the United States Code.

The copyright law of the United States (Title 17, United States Code) governs the making of photocopies or other reproductions of copyrighted material.

Under certain conditions specified in the law, libraries and archives are authorized to furnish a photocopy or other reproduction. One of these specified conditions is that the photocopy or reproduction is not to be "used for any purpose other than private study, scholarship, or research." If a user makes a request for, or later uses, a photocopy or reproduction for purposes in excess of "fair use," that user may be liable for copyright infringement.

This institution reserves the right to refuse to accept an order for photocopies if, in its judgment, fulfillment of the order would involve violation of copyright law.

AUG 29 1983

TD 2.20/4: R-206

DEVELOPMENT OF A HIGH PRESSURE WATER JET FOR THE RAPID REMOVAL OF CONCRETE

Research, Development and Technology

Turner-Fairbank Highway Research Center
6300 Georgetown Pike
McLean, Virginia 22101

Report No.
FHWA-TS-83-206

Final Report
February 1983

U.S. Department of Transportation

Federal Highway Administration

100,pgs-

This document is available to the U.S. public through the National Technical Information Service, Springfield, Virginia 22161

BEST DOCUMENT AVAILABLE

FOREWORD

This Technology Sharing report presents the results of a study to design, build and field test a prototype concrete removal system utilizing water jet (cavitation) technology. The report should be of interest to maintenance and bridge engineers concerned with bridge deck repair.

Research to provide improved maintenance techniques is included in the Federally Coordinated Program of Highway Research and Development in Project 3A "Maintenance Management".

Additional copies of the report can be obtained from the National Technical Information Service, Springfield, Virginia 22161.

R. J. Betsold
Director, Office of
Implementation

NOTICE

This document is disseminated under the sponsorship of the Department of Transportation in the interest of information exchange. The United States Government assumes no liability for its contents or use thereof.

The contents of this report reflect the views of the author who is responsible for the facts and the accuracy of the data presented herein. The contents do not necessarily reflect the official policy of the Department of Transportation.

This report does not constitute a standard, specification, or regulation.

The United States Government does not endorse products or manufacturers. Trade or manufacturer's names appear herein only because they are considered essential to the object of this document.

Technical Report Documentation Page

1. Report No. FHWA-TS-83-206	2. Government Accession No.	3. Recipient's Catalog No.
4. Title and Subtitle: Development of a High Pressure Water Jet for the Rapid Removal of Concrete		5. Report Date: February 1983
		6. Performing Organization Code
7. Author(s): A. P. Thiruvengadam, R. H. Mayhall, Jr., M. G. Bankard, A. A. Hochrein, Jr.		8. Performing Organization Report No. MGB-8027-001-FR
9. Performing Organization Name and Address: Daedalean Associates, Inc. 15110 Frederick Road Woodbine, Maryland 21797		10. Work Unit No. (TRAIS)
		11. Contract or Grant No. DTFH61-80-C-00143
12. Sponsoring Agency Name and Address: U. S. Department of Transportation Federal Highway Administration Office of Research, Development and Technology 400 Seventh Street, S.W., Washington, D.C. 20590		13. Type of Report and Period Covered: Final Report 9/24/80 - 1/31/1983
		14. Sponsoring Agency Code
15. Supplementary Notes		

16. Abstract

The objective of this program was to design, build and demonstrate a prototype concrete removal unit that utilized water cavitation erosion technology to accomplish the work. This final report presents an in-depth discussion of the significant elements of the program; specifically, the design considerations, the fabrication and laboratory testing and finally the field demonstration. In addition, there are separate sections which include a cost analysis and system comparison and the conclusion and recommendations that resulted from this program.

This program has promoted the advancement of water cavitation technology and has demonstrated its cost effectiveness and feasibility to be employed in large scale systems for concrete removal.

17. Key Words: CONCAVER™ Controlled Cavitation Erosion High Pressure Water Jet		18. Distribution Statement: Document is available to the U. S. public through the National Technical Information Service, Springfield, Virginia 22161	
19. Security Classif. (of this report): Unclassified	20. Security Classif. (of this page): Unclassified	21. No. of Pages: 75	22. Price

Form DOT F 1700.7 (8-72) Reproduction of completed page authorized

BEST DOCUMENT AVAILABLE

TABLE OF CONTENTS

	Page
EXECUTIVE OVERVIEW	vi
1.0 INTRODUCTION	1
2.0 DESIGN ANALYSIS	4
2.1 Analysis of the Mechanics of Concrete Erosion	4
2.2 Single Nozzle Versus Multinozzle	5
2.3 Applied Motion Versus Multinozzle	9
2.4 Configuration of Nozzle Impingement	9
2.5 Prototype Equipment Configuration	13
2.6 Surface Removal Mechanism	14
2.7 Operational Requirements of the System	15
3.0 PROTOTYPE DESIGN, FABRICATION AND TESTING	17
3.1 Concrete Removal Rig	17
3.2 Control System	22
3.3 High Pressure Water System	24
3.4 System Testing and Fine Tuning	27
4.0 DEMONSTRATION OF PROTOTYPE	36
4.1 Assessment of Field Demonstration	40
5.0 SYSTEM COST ANALYSIS AND SYSTEMS COMPARISON	46
5.1 System Cost Analysis	46
5.2 Systems Comparison	47
5.2.1 Technique	47
5.2.1.1 System Requirements	47
5.2.2 Technique	47
5.2.2.1 System Requirements	48
5.2.3 Technique	48
5.2.3.1 System Requirements	48
6.0 CONCLUSIONS AND RECOMMENDATIONS	49
6.1 Conclusions	49
6.2 Recommendations	52
6.2.1 General	52

BEST DOCUMENT AVAILABLE

TABLE OF CONTENTS - APPENDIX

		Page
1.0	DESCRIPTION OF SYSTEMS OPERATION	A-1
1.1	General.	A-1
1.2	Self-Propelled Power Module.	A-1
1.3	Control Module	A-2
1.4	Concrete Scarfing Module	A-6
2.0	SET-UP OF EQUIPMENT.	A-11
3.0	START-UP OF EQUIPMENT.	A-12
4.0	REMOVAL OF CONCRETE.	A-13

BEST DOCUMENT AVAILABLE

LIST OF ILLUSTRATIONS

		Page
FIGURE 1	ILLUSTRATION OF THE DIFFERENCE IN THE SHAPE OF THE CAVITATION ENVELOPE FORMED BY THE STANDARD ORIFICE NOZZLE AND THE FAN JET NOZZLE	6
FIGURE 2	INTENSITY OF EROSION AS A FUNCTION OF NOZZLE STANDOFF DISTANCE AT A PRESSURE OF 10,000 PSI	7
FIGURE 3	DEPTH OF CUT AS A FUNCTION OF IMPINGEMENT TIME FOR THE S-052 AND F-140 NOZZLES AT 12,000 PSI OPERATING PRESSURE.	8
FIGURE 4	INCREASING VOLUME REMOVAL RATE BY INCREASING THE QUANTITY OF NOZZLE FIXTURES.	10
FIGURE 5	CONFIGURATION UTILIZED TO DETERMINE EFFECTS OF APPLYING A FORWARD MOTION TO A ROTATING NOZZLE ASSEMBLY.	11
FIGURE 6	NOZZLE CONFIGURATION UTILIZED FOR DETERMINING THE EFFECTS OF EROSION STRATEGY.	12
FIGURE 7	GRAPHIC LAYOUT OF WATER JET SYSTEM	16
FIGURE 8	DETAILS OF CONCRETE REMOVAL UNIT SHOWING THE NOZZLE TRANSLATION MECHANISM	18
FIGURE 9	DETAILS OF CONCRETE REMOVAL UNIT SHOWING THE NOZZLE CARRIAGE ASSEMBLY	20
FIGURE 10	CONCRETE REMOVAL UNIT, MAIN ASSEMBLY	21
FIGURE 11	CONCRETE REMOVAL UNIT CONTROL STATION.	23
FIGURE 12	FLUID POWER DIAGRAM OF THE CONCRETE REMOVAL UNIT	25
FIGURE 13	ELECTRICAL WIRING DIAGRAM OF THE CONCRETE REMOVAL UNIT	26
FIGURE 14	HIGH PRESSURE WATER SYSTEM FOR CONCRETE REMOVAL.	28
FIGURE 15	0.125 STANDOFF TEST RESULTS OF CONCRETE REMOVAL UNIT OPTIMIZATION.	30

BEST DOCUMENT AVAILABLE

		Page
FIGURE 16	NOZZLE FLOW AS A FUNCTION OF NOZZLE PRESSURE	31
FIGURE 17	DEPTH OF CUT AS A FUNCTION OF NOZZLE ANGLE FOR THE 0.060 NOZZLE, ROTATIONAL SPEED 30 RPM, ADVANCE RATE 1 FT/MIN. CONDUCTED AT DAI TEST PAD.	33
FIGURE 18	DEPTH OF CUT AS A FUNCTION OF NOZZLE ANGLE FOR THE 0.060 NOZZLES AT 20 DEGREE ANGLES, ADVANCING .5 FT/MIN. CONDUCTED ON LIMESTONE SAMPLE.	34
FIGURE 19	TEST PAD AND CONCRETE REMOVAL UNIT.	35
FIGURE 20	CONCRETE REMOVAL UNIT IN OPERATION.	38
FIGURE 21	CUTTING HEADS IN OPERATION.	39
FIGURE 22	CONCRETE REMOVED TO FULL DEPTH.	41
FIGURE 23	BRIDGE AFTER CONCRETE WAS REMOVED	42
FIGURE 24	TEST DATA COLLECTED DURING FIELD DEMONSTRATION	44
FIGURE 25	DAI CONCAVER CONCRETE REMOVAL TOOL.	50
FIGURE 26	DAI CONCAVER CONCRETE REMOVAL SYSTEM.	51

APPENDIX ILLUSTRATIONS

FIGURE A-1	FLUID POWER DIAGRAM OF THE CONCRETE REMOVAL UNIT.	A-3
FIGURE A-2	ELECTRICAL WIRING DIAGRAM OF THE CONCRETE REMOVAL UNIT.	A-4
FIGURE A-3	HIGH PRESSURE WATER SYSTEM FOR CONCRETE REMOVAL	A-5
FIGURE A-4	CONCRETE REMOVAL UNIT, MAIN ASSEMBLY.	A-7

BEST AVAILABLE

APPENDIX LIST OF TABLES

		Page
TABLE I	RECOMMENDED SPARE PARTS LIST	A-9
TABLE II	MAINTENANCE TABLE.	A-10

BEST DOCUMENT AVAILABLE

EXECUTIVE OVERVIEW

The successful development and demonstration of a high pressure water jet system for the rapid removal of concrete has been completed. This report details the design analysis that defined the operational requirements of the system, the fabrication of a prototype machine, the practical demonstration of the system, and a listing of conclusions and recommendations. The prototype concrete removal system developed, proved that the use of cavitation erosion in bridge and roadway repair procedures is a practical, cost-effective, efficient and ready for large scale deployment technology that can enhance this nation's critical and vital highway and bridge maintenance repair and reclamation needs.

The CONCAVER™ (controlled cavitation erosion) system, utilized as the removal tool in the operating system, effectively removed bridge deck concrete using water only as the working medium. The mechanization of the system improved worker safety and the reduction of personnel required to accomplish the work. The work rate of the system proved to be superior in all respects when compared to conventional methods in use today such as impact methods and/or saw cutting. Impact tools can cause cracking damage to sound areas of concrete that would expand the scope of work necessary and due to large volume of steel reinforcement, saw cutting is very expensive. The CONCAVER system removes only the concrete desired and does not damage adjacent areas. Environmental impact is minimal as compared to in-use conventional methods. Noise level is significantly reduced, no dust is created, and removal of the effluent or eroded concrete does not require additional work.

From design concept to prototype field demonstration on the Mattaponi Bridge in Virginia during October, 1982, it became apparent that a technology whose time had come was being employed. There were no doubts that the technology of controlled cavitation erosion could do the work intended. Moreover, the engineering

NOT AVAILABLE

requirements encountered during design and fabrication were addressed and resolved.

The objective of the program was to demonstrate that the CONCAVER system would be a feasible, reliable, cost-effective means to improve the state-of-technology for roadway and bridge maintenance and repair. The prototype system did prove effective during demonstration and provided a means to define the required operational characteristics which would be incorporated into a production system.

This program has demonstrated and provided the valuable information and data essential for making a function-oriented appraisal of all the elements of the system to achieve operating field requirements at minimum cost.

BEST DOCUMENT AVAILABLE

DEVELOPMENT OF A HIGH PRESSURE WATER JET FOR THE RAPID REMOVAL OF CONCRETE

1.0 INTRODUCTION

"Our nation's bridge surfaces which were expected to last for forty years are requiring major repairs after five to ten years and often must be replaced after 13 years." This statement was made in the Comptroller General's report to the Congress of the United States in January of 1979. In the four years that have passed, the situation has only deteriorated and caused Congress to pass a bill that includes funds specifically designated for roadway and bridge repair.

The deterioration of these bridge systems is due largely to the use of salts and chlorides for removing snow and ice from bridge roadways. These salts and chlorides migrate into the porous concrete. Alkali waters enter the concrete and finally reach the reinforcing steel. The resulting corrosion of the reinforcing steel causes a failure in the bond between the concrete and steel. Additionally, the growing crystals resulting from the alternate wetting and drying fill the pores in the concrete and develop pressures large enough to eventually disrupt the concrete, thereby precipitating road surface failures. The alternate expansion and contraction of the entrapped water ultimately results in damage to the concrete road surface causing delamination and making it susceptible to structural cracking and spalling.

The current state-of-technology for repairing damaged roadways involves the mechanical removal of the damaged concrete with pneumatic jackhammers. This requires the removal of the top layer of concrete, exposing the first layer of reinforcing rods. In order to obtain a durable repair, the reinforcing rods must be completely cleaned of corrosion and completely enveloped in the new concrete pour. This requires the removal of concrete in

BEST DOCUMENT AVAILABLE

close proximity to the steel rod as well as under the rod. This is a difficult task which is further complicated by the fact that once the steel rod is struck by the bit of the hammer, a bond failure between the steel and concrete may occur. This failure may occur well beyond the point of impact, possibly damaging the adjacent area of road surface that was itself still in good shape.

In addition to being a damaging force in itself, the pneumatic hammer removal system is slow and tiring to the operator. Additionally, it is environmentally unsatisfactory due to the jackhammering of the concrete and the sandblasting required to clean the rebar of contaminants. Both of these operations release large amounts of dust and other contaminants into the environment.

Recognizing these deficiencies in the current state-of-technology, the Federal Highway Administration (FHWA) contracted with DAEDALEAN ASSOCIATES, Inc. (DAI) on a program to develop a high pressure cavitating water jet concrete removal system. This program has concentrated on optimizing the water jets in order to achieve maximum removal rates. From this optimization DAI has developed a cavitating water jet system. The cavitating nozzle produces cavitating bubbles which collapse on the surface to be eroded. Through the combination of cavitation and high velocity flow a large number of these cavitation bubbles are produced in the jet. These bubbles are carried by the jet to the concrete surface where they collapse with a predetermined intensity of erosion. This erosion can be tailored to different types of road surfaces that are presently in use.

Through the use of controlled cavitation erosion (CONCAVER™) technology, the concrete removal system will require a minimum amount of water at high pressure, 10 - 15 thousand pounds per square inch (psi) (690-1034 BAR). At this pressure, the system can be fabricated from commercially available components. The operating pressures are also low enough so as not to require the use of an intensifier or rigid plumbing, making the pumping

BEST DOCUMENT AVAILABLE

subsystem a very affordable and flexible component of the overall system design. Sandblasting with its accompanying release of dust and other contaminants into the environment is not necessary.

This report provides a discussion of the mechanics of the concrete erosion along with an evaluation of single nozzle, multinozzle and applied motion systems. The prototype equipment configuration is outlined with the nozzle impingement and prototype configurations defined. The operational requirements of the system are detailed in the design analysis section.

The prototype equipment includes discussions on the concrete removal rig, control system and the high pressure water system.

The equipment demonstration section of the report includes an equipment assessment and preliminary system cost analysis and comparison. The associated recommendations and conclusions are also presented.

AVAILABLE

2.0 DESIGN ANALYSIS

2.1 Analysis of the Mechanics of Concrete Erosion

Prior experience with the erosion of homogeneous rock structures has provided a strong basis for the conduct of this concrete erosion program. A previous research and development program involved the erosion of a trench in rock-type materials including 30,000 psi (2100 Kg/sq.cm) compressive strength granite. A major design requirement imposed certain restrictions upon the rock cutting mechanism. This requirement was that the trenching head be physically capable of descending within the walls of its own trench. Several configurations of cutting approaches were tested to achieve this goal. The inherent nature of water jetting is such that a given nozzle will perform best within a certain range of nozzle distances. When this range of nozzle distances is exceeded, the nozzle jet will not perform up to its potential and the nozzle must again be brought within the range of acceptable distances. The nozzle best suited for concrete erosion is one S-052 straight orifice type developed from erosion testing in 30,000 psi (2100 Kg/sq. cm.) compressive strength granite. This nozzle is capable of effecting significant removal of material from concrete blocks at a distance of over 3.0 inches (76.2 mm).

Therefore, it was anticipated that the concrete erosion system could be designed in such a manner that the reinforcing bars would be exposed by utilizing a single nozzle at a reasonable standoff distance. This would greatly decrease the degree of complexity of any automated nozzle distance controls and sensors. The S-052 nozzle has demonstrated its concrete cutting potential and those results will be reported within the following sections of this report. Presented herein is an analysis of concrete erosion removal from the viewpoint of nozzle positioning. The synergistic effects of multiple nozzles and the benefits of applied two axis nozzle motion have been explored.

BEST DOCUMENT AVAILABLE

2.2 Single Nozzle Versus Multinozzle

An understanding of the two basic types of nozzles is necessary prior to any in-depth analysis of concrete erosion strategy. FIGURE 1 is a representation of the two types of nozzles initially evaluated for use in the program. These include a fan jet nozzle and a straight jet nozzle. Both types of nozzles, if of equivalent orifice area, will achieve similar peak erosion intensities and require similar flow and horsepower inputs. However the fan nozzle delivers a flat fan shaped spray pattern and the straight jet nozzle delivers a cylindrically shaped spray pattern. The most dramatic difference between the two types of nozzles is the individual dependency upon standoff distance. The fan nozzle depends upon a relatively close working distance (less than 0.25 inch), (6.4 mm), while the straight jet nozzle has a peak intensity nozzle standoff distance of 1.0 inch (25.4 mm). The intensity of erosion as a function of nozzle standoff distance at 10,000 psi (690 BAR) pressure for the fan nozzle and straight jet nozzle is graphically illustrated in FIGURE 2. As shown, the F-140 fan nozzle loses output power dramatically after exceeding a distance of 0.30 inch (7.6 mm).

Further illustration of this point is shown in FIGURE 3 - depth of cut as a function of impingement time for the two types of nozzles. As shown, the S-052 straight jet type nozzle cuts to a depth of 3.0 inches (76.2 mm) after 10 seconds impingement time in a construction grade solid concrete block whereas in the same time interval the F-140 fan jet type nozzle cuts to a depth of only 0.65 inches (16.5 mm). The cut of the fan jet is approximately five times wider than the straight jet but not nearly as deep.

A single nozzle operating at its predetermined optimum conditions will effect a certain amount of material removal from a sample work piece. In order to increase this amount of removal - in this case the removal referred to is the erosion of a concrete sample - there are three approaches that can be utilized.

BEST DOCUMENT AVAILABLE

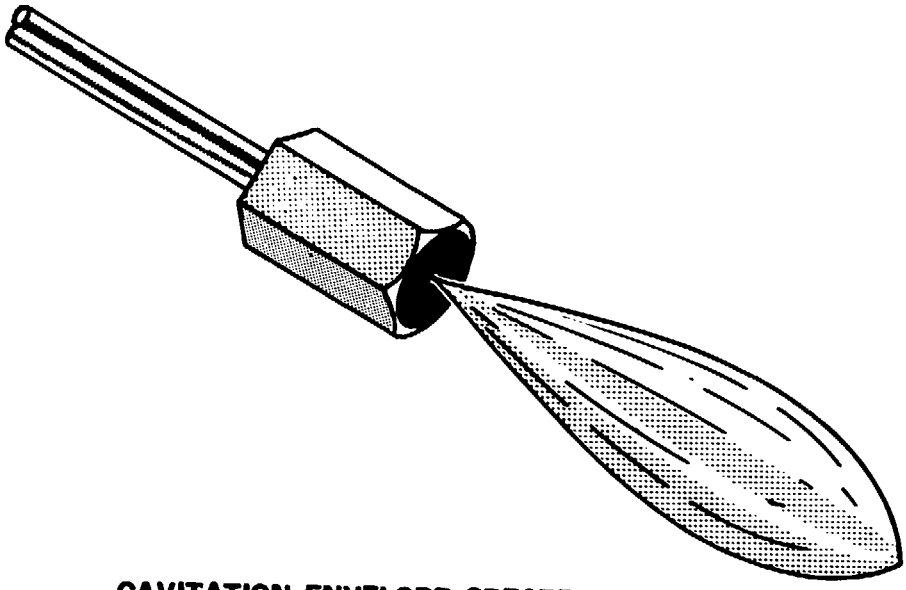

CAVITATION ENVELOPE CREATED BY DAI STANDARD ORIFICE NOZZLE

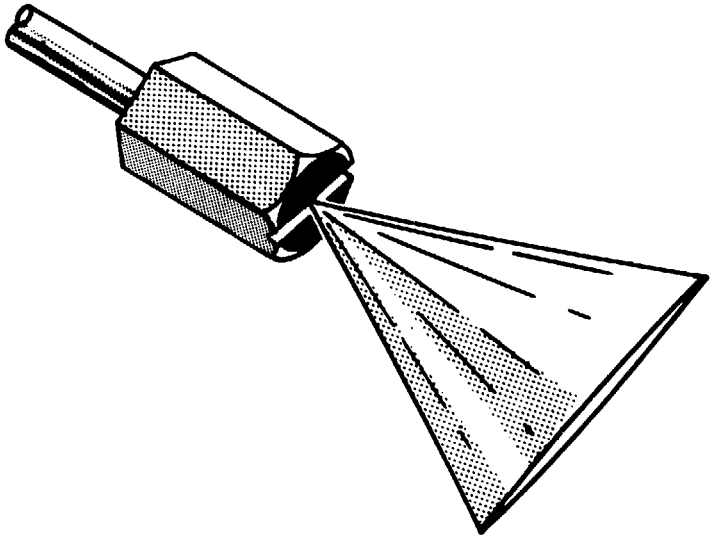

CAVITATION ENVELOPE CREATED BY DAI FAN JET NOZZLE

FIGURE 1 ILLUSTRATION OF THE DIFFERENCE IN THE SHAPE OF THE CAVITATION ENVELOPE FORMED BY THE STANDARD ORIFICE NOZZLE AND THE FAN JET NOZZLE

BEST DOCUMENT AVAILABLE

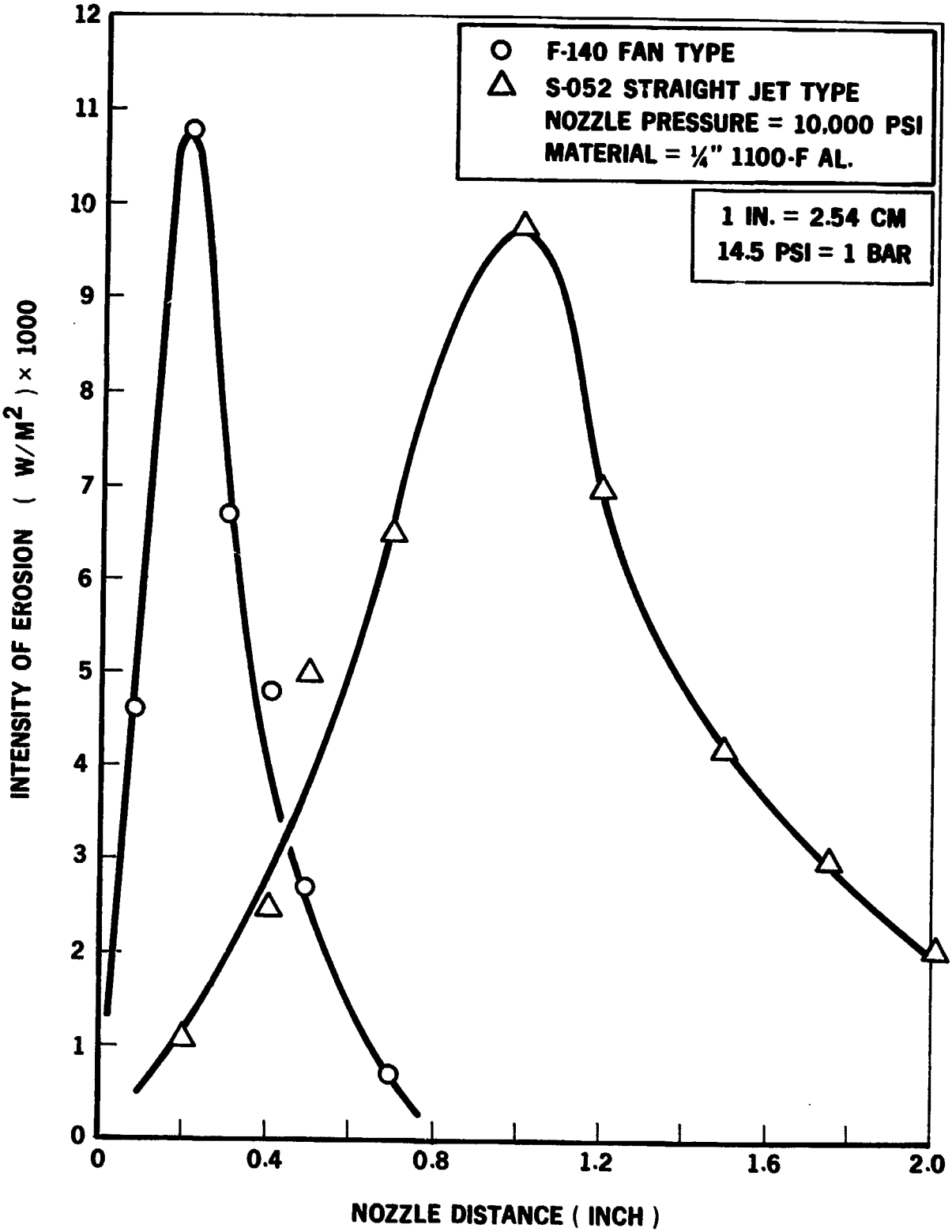

FIGURE 2 INTENSITY OF EROSION AS A FUNCTION OF NOZZLE STANDOFF DISTANCE AT A PRESSURE OF 10,000 PSI

BEST DOCUMENT AVAILABLE

BEST DOCUMENT AVAILABLE

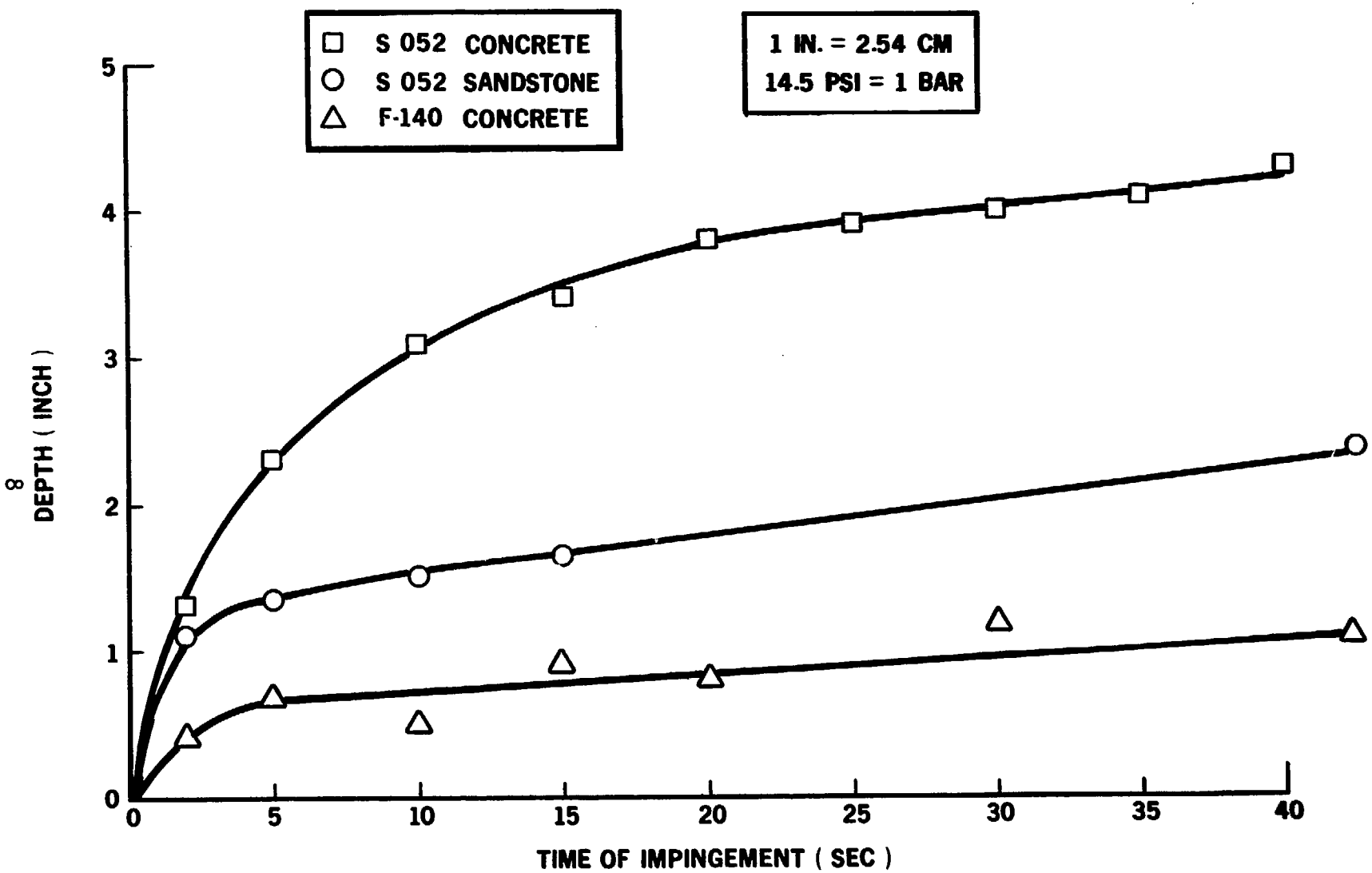

FIGURE 3 DEPTH OF CUT AS A FUNCTION OF IMPINGEMENT TIME FOR THE S-052 AND F-140 NOZZLES AT 12,000 PSI OPERATING PRESSURE

By simply increasing the number of nozzles, an increase in the volumetric removal rate can be achieved. However, the ratio of number of nozzles to volume removal rate is so nearly a one to one ratio that it is not an efficient method of increasing reval rates (FIGURE 4).

2.3 Applied Motion Versus Multinozzle

The second approach that can be utilized to increase volume removal rate is to apply motion to the nozzle. This motion can bring more material into the sphere of influence of the nozzle without significantly increasing the input power parameters. FIGURE 5 shows one type of motion, previously demonstrated, which adequately increased the volume removal rates without increasing the input horsepower. There are limitations with respect to the impingement time to the types and velocities of motion which can be successfully applied to an impinging nozzle. For example, if a nozzle is translated at too high a rate (approximately 20 feet per minute (6.1 m) for concrete) no significant erosion removal will occur due to the decrease in impingement time. A constraint to the addition of motion to a nozzle with respect to a stationary sample is that the maximum erosion potential of the nozzle is not achieved. A tradeoff situation exists between overall volume removal rates and the maximum potential of a nozzle. A second concern inherent with a moving nozzle system is the breakage of nozzle fixtures due to striking the stationary sample. Sensors and other controls must be designed to afford protection to the system of nozzles.

2.4 Configuration of Nozzle Impingement

A third approach to achieving increased volume removal rates is impingement axis configuration. As shown in FIGURE 6, two nozzles were configured such that the impinging jets would converge upon a point some distance below the surface of the sample work piece. It was concluded from the analysis of the particulate gathered from previous applied motion concrete testing, that the process of erosion for concrete and sandstone type

BEST DOCUMENT AVAILABLE

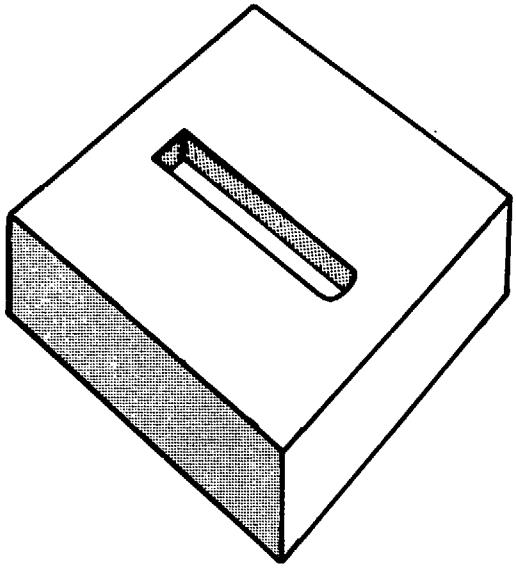

SLOT CROSS-SECTION

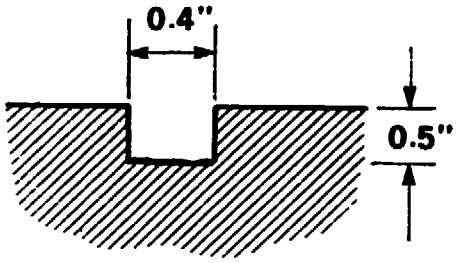

AREA = 0.20 IN.^{2}
LENGTH = 4.5 IN.
ADVANCE RATE = 16 IN./MIN.
NUMBER OF PASSES = 1
VOLUME REMOVAL RATE = 3.1 IN.^{3}/MIN.
NOZZLE = SINGLE F-128
NOZZLE PRESSURE = 10,000 PSI
MATERIAL = 30,000 PSI GRANITE

12 A

14.5 PSI = 1 BAR
1 IN. = 2.54 CM
1 IN.^{2} = 6.45 CM^2
1 IN.^{3} = 16.4 CM^3

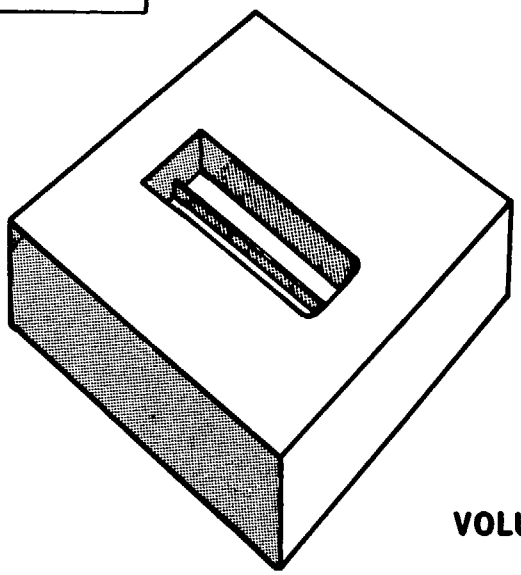

SLOT CROSS-SECTION

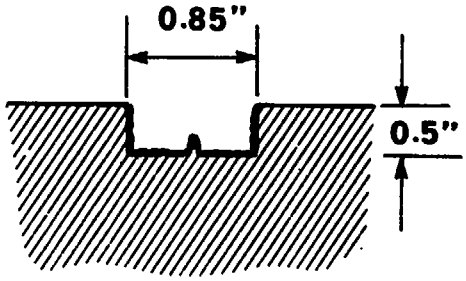

AREA = 0.425 IN.^{2}
LENGTH = 4.5 IN.
ADVANCE RATE = 16 IN./MIN.
NUMBER OF PASSES = 1
VOLUME REMOVAL RATE = 6.8 IN.^{3}/MIN.
NOZZLE = TWO F-128
NOZZLE PRESSURE = 10,000 PSI
MATERIAL = 30,000 PSI GRANITE
NOZZLE SPACING = 0.62 INCHES

12 B

FIGURE 4 INCREASING VOLUME REMOVAL RATE BY INCREASING THE QUANTITY OF NOZZLE FIXTURES

BEST DOCUMENT AVAILABLE

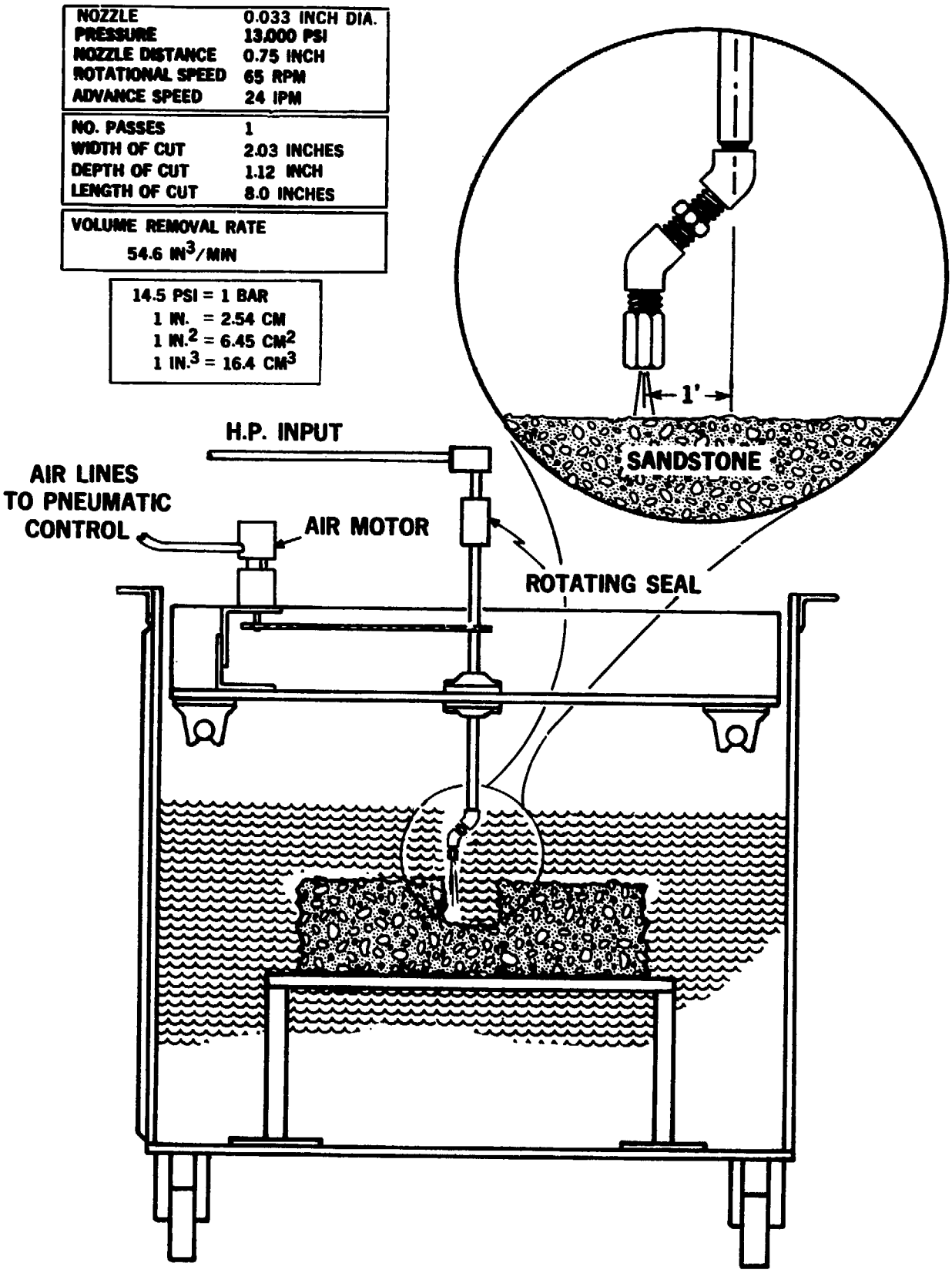

FIGURE 5 CONFIGURATION UTILIZED TO DETERMINE EFFECTS OF APPLYING A FORWARD MOTION TO A ROTATING NOZZLE ASSEMBLY

BEST DOCUMENT AVAILABLE

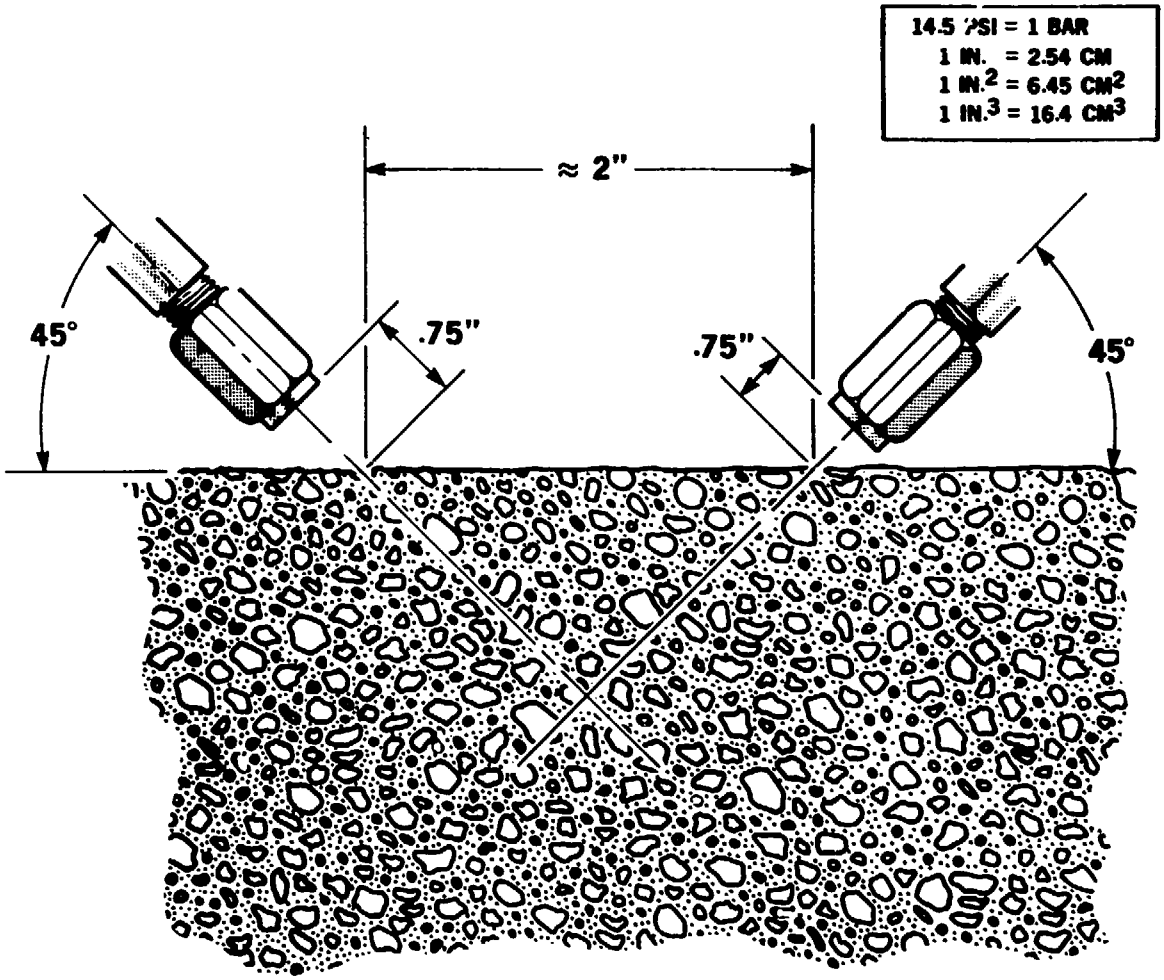

SUMMARY RESULTS:

CROSS-SECTIONAL AREA EFFECTED = 1.09 IN^2
LENGTH OF CUT = 14 IN
ADVANCE RATE = 18 IN/MIN
NUMBER OF PASSES = 2
VOLUME REMOVAL RATE = 10.2 IN^3/MIN
NOZZLE = TWO 0.033 INCH DIAMETER
NOZZLE PRESSURE = 10,000 PSI
MATERIAL = 11,200 PSI SANDSTONE

FIGURE 6 NOZZLE CONFIGURATION UTILIZED FOR DETERMINING THE EFFECTS OF EROSION STRATEGY

BEST DOCUMENT AVAILABLE

materials produces a very fine sandlike particulate. The two nozzle strategy of nozzle impingement produced the desired result - with conical shaped pieces of concrete removed as solid chunks. It is a more efficient system that does not reduce the excavated material to sandlike particulate. The overall system design was based upon a combination of jet nozzle motion and associate volumetric efficient trade-offs.

2.5 Prototype Equipment Configuration

The prototype equipment configuration is controlled or dictated by the design requirements. For this program, the design requirements have been identified as follows:

1. The equipment shall be designed to operate at a minimum of 15,000 psi (1034 BAR) with appropriate factors of safety.
2. The equipment shall be designed to operate at the maximum concrete removal rate per horsepower. Minimum rate for removal at 110 input horsepower (82 Kw. - Kilo watt) shall be 6 cubic feet per hour (0.17 Cubic Meters).
3. The operation of the equipment shall require no more than one traffic lane, and the design shall allow for continual passage of traffic in other lanes while the equipment is in use.
4. The equipment shall be capable of moving from one job site to another at normal highway speed. Relocation by trailer is acceptable.
5. The equipment design shall make extensive use of commercially available system components where possible.
6. The design shall be predicated on the requirement that all necessary maintenance be accomplished by a typical contractor or State Highway maintenance force.
7. The design shall take into consideration all pertinent OSHA and EPA requirements.

BEST DOCUMENT AVAILABLE

8. The operational requirements, with respect to work crew size, shall be kept to a minimum.

2.6 Surface Removal Mechanism

Preliminary testing and prior experience dictates a necessity to operate the concrete cutting mechanism at 15,000 psi (1034 BAR). The benefit derived from increasing operation pressure from 10,000 psi to 15,000 psi (690 to 1034 BAR) is well documented. An approximate 15 percent increase in removal rates can be achieved at the increased pressure level. Flexible operation is curtailed at this pressure (15,000 psi) due to the reported pressure limitation in flexible high pressure hose. This limitation is not expected to hinder the design of a handheld concrete removal system due to the fact that testing has shown that 10,000 psi (690 BAR) is adequate for this localized removal system.

A reevaluation of the proposed rigid plumbing of the high pressure water system operating at 15,000 psi (1034 BAR) had revealed many constraints and the proposed alternative was to operate the system at 10,000 psi (690 BAR).

It was mutually agreed between the Contractor and the Federal Highway Administration (FHWA) to operate the system of cutting nozzles at a pressure of 10,000 psi (690 BAR), reduced from the initial desire to operate at 15,000 psi (1034 BAR). This reduction in operating pressure was not anticipated to impair the equipment's ability to remove the required volume of concrete (6.0 cubic feet per hour with 110 hp) (0.17 m^3 with 82 Kw.). The decision to operate at the reduced pressure opened several avenues of design variations. For example, a pump was located which can deliver 23 gallons per minute (gpm) (87 liters per minute) at 10,000 psi (690 BAR) as opposed to the 18 gpm (68 liters per minute) delivery of the higher pressure pumping unit. This means that four nozzles of the relative size to be utilized can be run as opposed to three. In addition to this, rotary seals can be utilized within the system. The rotation of the nozzle assemblies has proven to be a very effective method in the high volume removal

BEST DOCUMENT AVAILABLE

of rock-type formations. FIGURE 7 illustrates the layout of the proposed water jetting system.

2.7 Operational Requirements of the System

The operational requirements of the system, as currently foreseen would consist of support equipment and personnel necessary to operate the waterbred system. A few basic assumptions need to be made about the concrete erosion operation to predict the support requirements. To exemplify a typical day's operation, it can be assumed that the pumping system will be operating at pressure for a maximum of five hours out of an eight hour period. This assumption is based upon travel time to and from a site, equipment set-up time, and traffic handling procedures. Based upon this, the following requirements can be identified.

Water Supply - 23 gpm (87 lpm) at 20 psi (1.4 BAR) (minimum) - 6,900 gal/day (26120 l/day)

Fuel Supply - Full load at 1,800 rpm - 10 gph (38 liters per hour) fuel consumption.
- 90 gallon (340 l) fuel tank capacity - 9 hour operation.

Support equipment required will include some type of transport truck for hauling the removed volume of concrete and a loading machine. The personnel required, exclusive of traffic handling personnel, will be as follows:

Quantity	Description
1	Concrete removal unit operator
1	High pressure pump operator
1	Logistical support personnel

BEST DOCUMENT AVAILABLE

BEST DOCUMENT AVAILABLE

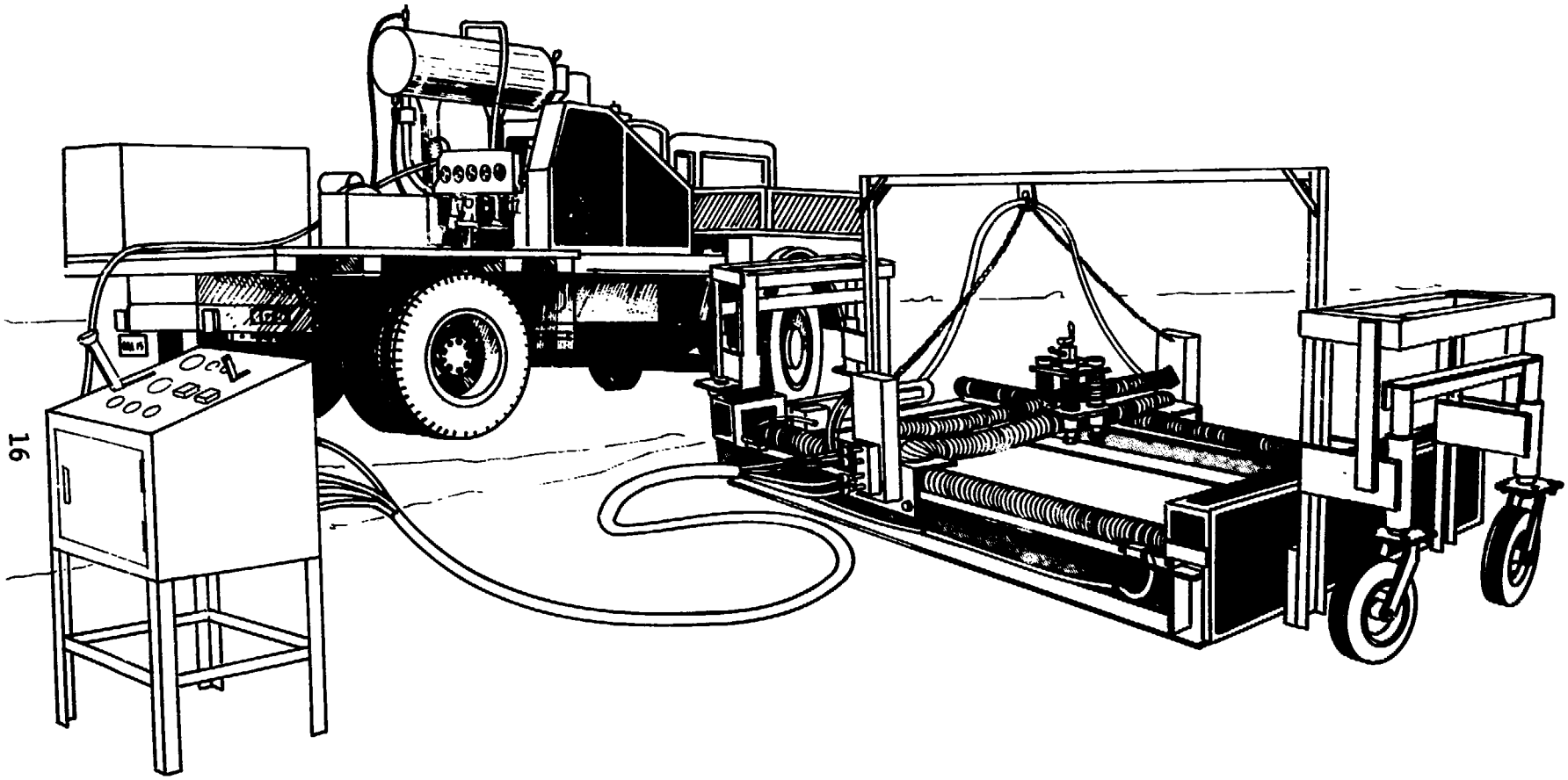

FIGURE 7 GRAPHIC LAYOUT OF WATER JET SYSTEM

3.0 PROTOTYPE DESIGN, FABRICATION AND TESTING

The design and fabrication of the concrete removal system involved integrating the major system components into a singular functional system. The major components are the concrete removal rig, control system and the high pressure water system. A synopsis of the specific designs and fabrication of each major system follows:

3.1 Concrete Removal Rig

The basic framework took a rectangular shape of 9.3 feet by 4.3 feet (2.8 m by 1.3 m) constructed of eight inch (203[2] mm) I-beam. The linear movement of the X and Y axis is achieved by the use of ball screws. These screws are two inches (50.8 mm) in diameter with a 1/2 inch (12.7 mm) lead. One screw is positioned on each of the long axis of the rig. These screws are supported on each end by pillow blocks. One screw is connected to a hydraulic motor which causes it to rotate. On the opposite end of this screw is a timing belt and pulley which attaches to the other screw turning both in unison. These screws are shielded from debris by the use of protective bellows. The ball nuts on these screws are attached to the short axis carriage. As the ball screws are turned, the carriage is caused to advance. The nozzle translation mechanism is illustrated in FIGURE 8.

The short axis carriage is mounted on two pieces of angle measuring 8 feet x 6 inches x 1/2 inch (2.5 m x 152.4 mm x 12.7 mm). To these angles are attached rollers which guide the carriage down the edge of the I-beam. To the top of this angle is attached a slide which is used to support and guide the nozzle carriage. The ball nuts are attached to the underside and provide the long axis movement.

A section of aluminum channel 7 inches x 18 feet (177.8 mm x 5.5 m) long is attached to each end of the carriage to support the ball screw which drives the nozzle carriage. On one side of the short axis carriage a hydraulic manifold and a

BEST DOCUMENT AVAILABLE

BEST DOCUMENT AVAILABLE

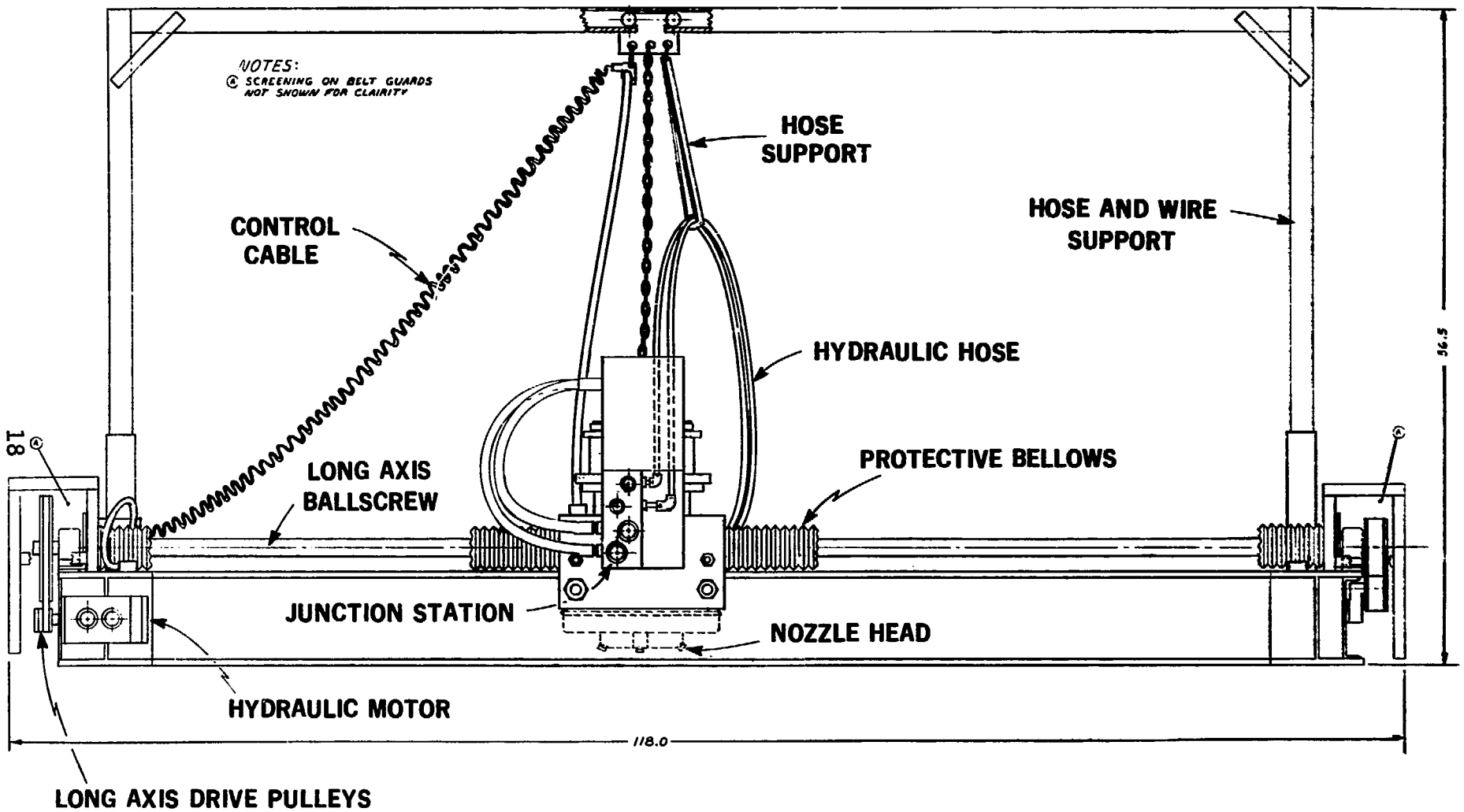

FIGURE 8 DETAILS OF CONCRETE REMOVAL UNIT SHOWING THE NOZZLE TRANSLATION MECHANISM

hydraulic motor which drives the ball screw which in turn advances the nozzle carriage has been mounted. The ball screw is connected to the hydraulic motor by a vee belt. This vee belt should allow slippage in case of any binding of nozzle carriage due to debris or butting into the concrete. The ball screws are mounted on flange bearings which are attached to the channel.

The nozzle carriage consists of four aluminum plates and four ball screws. This is represented in FIGURE 9. The base plate for the nozzle carriage is attached to two slide bearings and the ball nut is attached to the plate which applies motion to the carriage. Four ball nuts and screws are attached to the bottom of the base plate. These screws tie the plates together and are used as vertical adjustments for nozzle standoff. The rotation of the four screws is tied together by the use of timing belt pulleys and timing belts. A hand crank and locking mechanism are attached to one of the screws. Mounted on the bottom of the screws are flange bearings which are attached to the bottom plate. The bottom plate is attached to the nozzle support plate by the use of four vibration isolators. Two rotary seals are attached to the nozzle support plate, a hydraulic motor is also mounted to the plate. The hydraulic motor is used to drive the nozzle heads which are attached to the spindle of the rotary seal. The sprockets and chains are used to drive the rotary seals by the hydraulic motor. A shield was manufactured and coated with a urethane that is highly resistant to erosion. This shield was attached to the nozzle support plate and houses the chain drive. A high pressure junction manifold is attached to the top plate and supplies water to the rotating seals. FIGURE 10 is an assembly view of the concrete removal rig. Sockets have been welded to the end of the rig. These sockets are fitted for pins that are attached to the roller stands which give the unit mobility. These stands are equipped with hydraulic jacks used to raise the rig off the ground for transportation. A hose and wire guide suspension system has been attached to the unit and is used

BEST DOCUMENT AVAILABLE

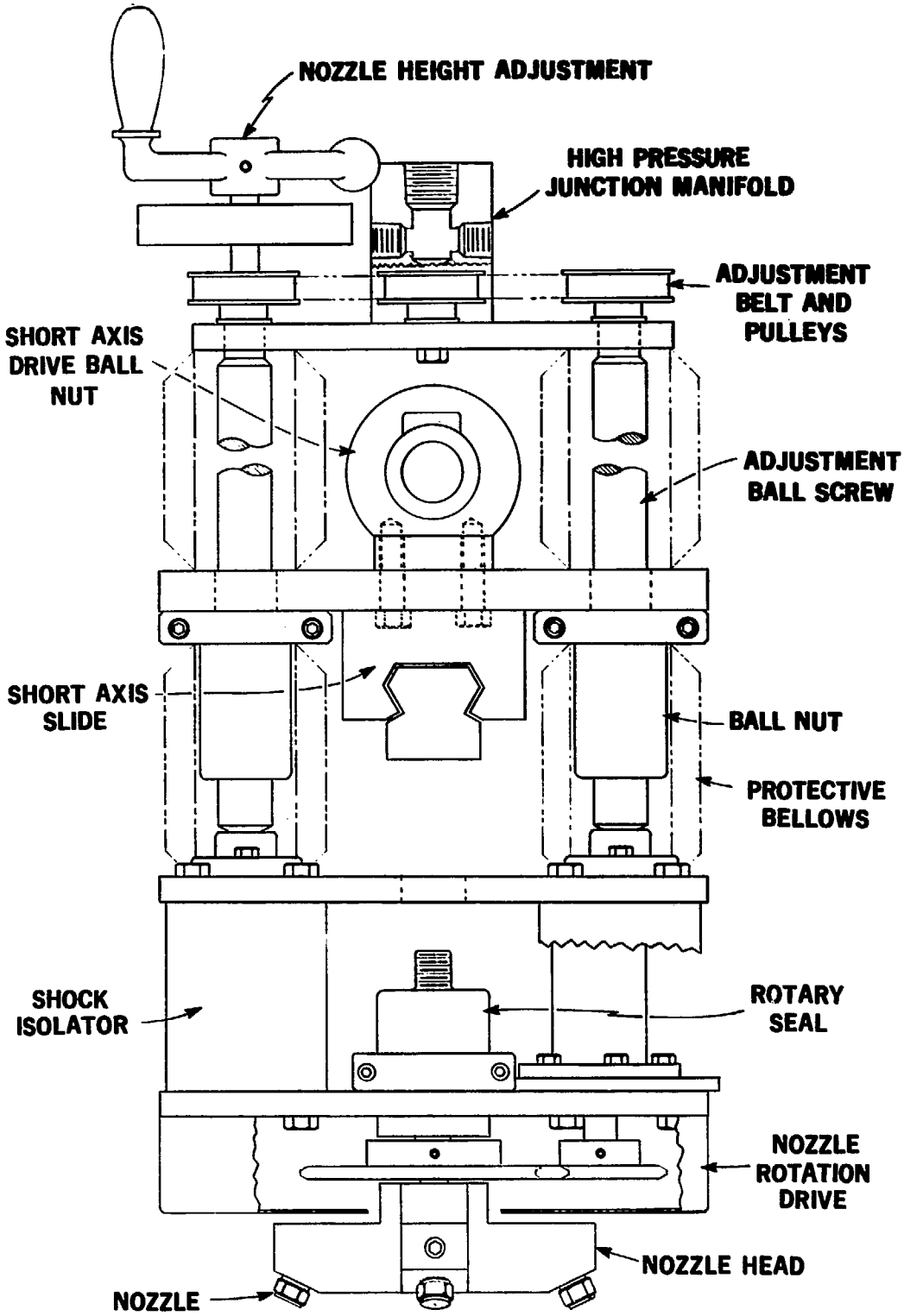

FIGURE 9 DETAILS OF CONCRETE REMOVAL UNIT SHOWING THE NOZZLE CARRIAGE ASSEMBLY

BEST DOCUMENT AVAILABLE

BEST DOCUMENT AVAILABLE

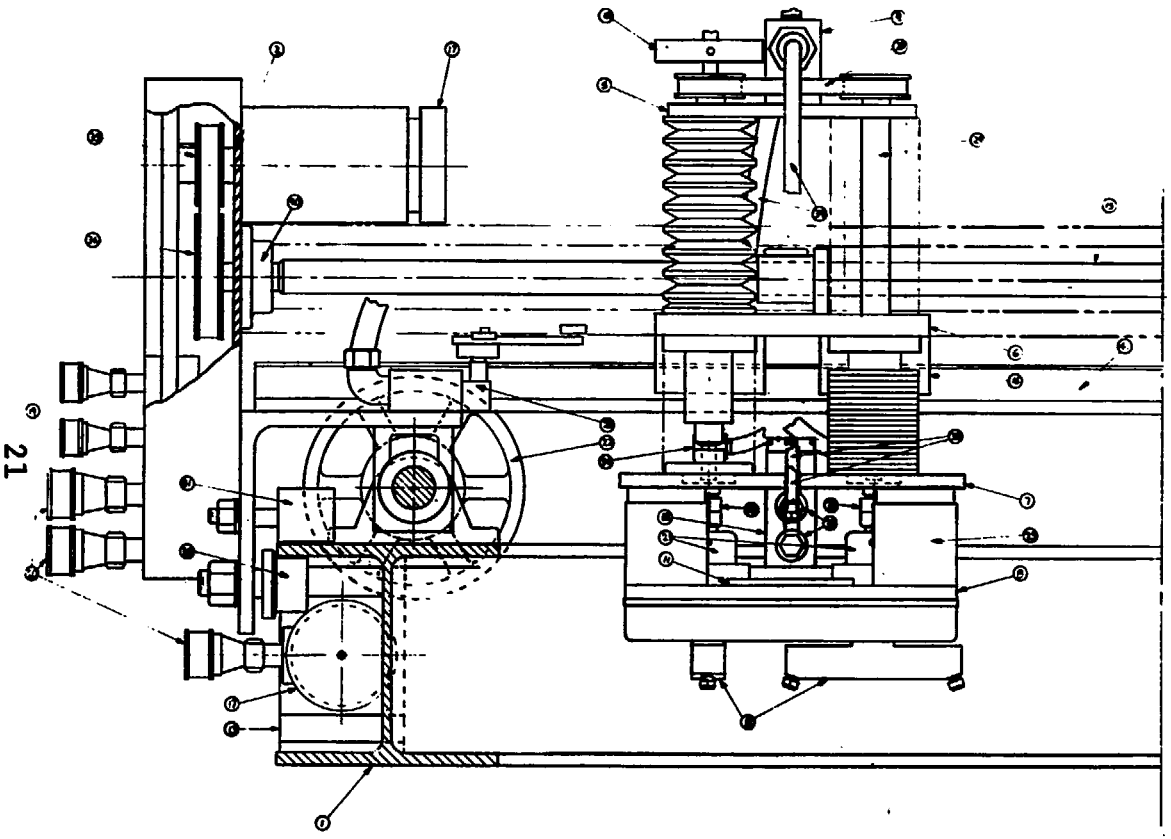

REF. DESIG	QTY REQD	NOMENCLATURE OR DESCRIPTION	CODE NO. AND PART OR IDENTIFYING NO.	SPECIFICATION	ITEM NO
	2	NOZZLE CHAIN SPROCKETS	B 340 3/8" BORE	MORSE	42
	1	THC SLIDE TRACK	N3R40 8A	THK	41
	2	"Y" SCREW BEARINGS	CPFDR	FAFNIR	40
	2	H.P. WATER HOSES	400BST	ROGAN & SHANLY	39
	1	HYDRAULIC HOSES	3901 7FT	SIMPLEX	38
	1	"X" MOTOR PULLEY	AK30H	BROWNING	37
	1	"Y" SCREW DRIVE PULLEY	AK61H	BROWNING	36
	1	"Y" MOTOR PULLEY	AK30H	BROWNING	35
	2	H.P. STREET ELBOW	4SE	CAJON	34
	2	H.P. REDUCERS	6HCC6	CAJON	33
	2	SWIVEL JOINTS	BD 500-061	BARCO	32
	4	NEOPRENE ROLLER	CR-5029-2	STILSON	31
	4	FLANGE ROLLER	FLR-2	OSBORN	30
	1	CRANK HANDLE	6088-K13	MC MASTER-CARR	29
	1	HEIGHT ADJUST. BELT	450L005	WOODS	28
	1	HEIGHT ADJUST IDLER	M1285T	BROWNING	27
	4	HEIGHT ADJUST. PULLEY	21 L005	WOODS	26
	4	VIBRATION MOUNTS	1023-31BC	SBP	25
	4	HEIGHT ADJUSTMENT SCREW	R004A	WARNER ELEC.	24
	6	LIMIT SWITCHES	1LS1	HONEYWELL	23
	1	"X" SCREW DRIVE PULLEY	AK84H	BROWNING	22
	2	ROTARY SEALS	434200-001	PARTECH	21
	4	QUICK CONNECT	4HK-84-R26	HANSON	20
	2	QUICK CONNECT	3HK-83 R21	HANSON	19
	1	HYDRAULIC MOTOR (NOZZLE)	100 SERIES	LAMINA	18
	2	HYDRAULIC MOTORS (X&Y)	107-1007	CHAR-LYNN	17
	2	THC SLIDE BEARINGS	SR40	THK	16
	1	BALL SCREW (4FT)	R1105-54-FDCBW	WARNER ELEC	15
	2	BALL SCREWS (8FT)	R1502-108-FDCBW	WARNER ELEC	14
	1	"X" MOTOR MOUNT	C 11204		13
	2	NOZZLE MANIFOLD	C 11211		12
	1	NOZZLE MOTOR MOUNT	C 11210		11
	1	LOCKING COG	C 11209		10
	1	JUNTION BLOCK	C 11208		9
	1	LOWER NOZZLE SUPORT PLATE	C 11207B		8
	1	UPPER NOZZLE SUPORT PLATE	C 11207A		7
	1	LOWER SCREW PLATE	C 11206		6
	1	BALL SCREW RETAINER PLATE	C 11205		5
	1	IDLER PULLEY MOUNT	C 11203		4
	1	BRIDGE MOUNT	C 11202		3
	1	"Y" MOTOR & BRG. MOUNT	C 11201		2
	1	TRANSLATION CARRIAGE	B 11200		1

PARTS LIST

FIGURE 10 CONCRETE REMOVAL UNIT, MAIN ASSEMBLY

to support the high pressure and keeps the wires from becoming fouled.

3.2 Control System

Two interdependent systems are involved when discussing the control system. The hydraulic system which is used to drive the various motors and the electrical system which actuates the hydraulic valves, are these two systems. In order to simplify the description, these two systems will be described separately. The hydraulic system originates and ends on the truck. A hydraulic fluid reservoir is located on the truck which is capable of holding 30 gallons (114 l). The outlet from the reservoir is equipped with a ball valve, this is for use only in emergencies and should be left open at all other times. The outlet from the reservoir runs to the hydraulic pump. This pump is driven by the power take-off on the transmission of the truck. In order to vary pump displacement, a venier throttle has been installed in the truck's cab. This throttle connects directly to the carburetor linkages on the truck's engine. From the outlet of the pump, the fluid runs through a relief valve to the rear of the truck where the junction station is located. The junction station is equipped with a gauge and two quick-connects.

The control station is a portable unit which houses the hydraulic valves and electricl switches. This station consists of an enclosed box which houses the valves and switches. FIGURE 11 is a graphic representation of the control station. The frame of the station is constructed of angle iron and is sheathed with aluminum plate. Located on the side of the control station are two quick-connects. These both are connected to the connects on the junction by hydraulic hose. The pressurized fluid flowing from the pump passes through a bypass valve. This valve is capable of diverting fluid from the pressure line to the tank line. From this valve fluid is supplied to the valve manifold. Three hydraulic valves are attached to this manifold. The first supplies

BEST DOCUMENT AVAILABLE

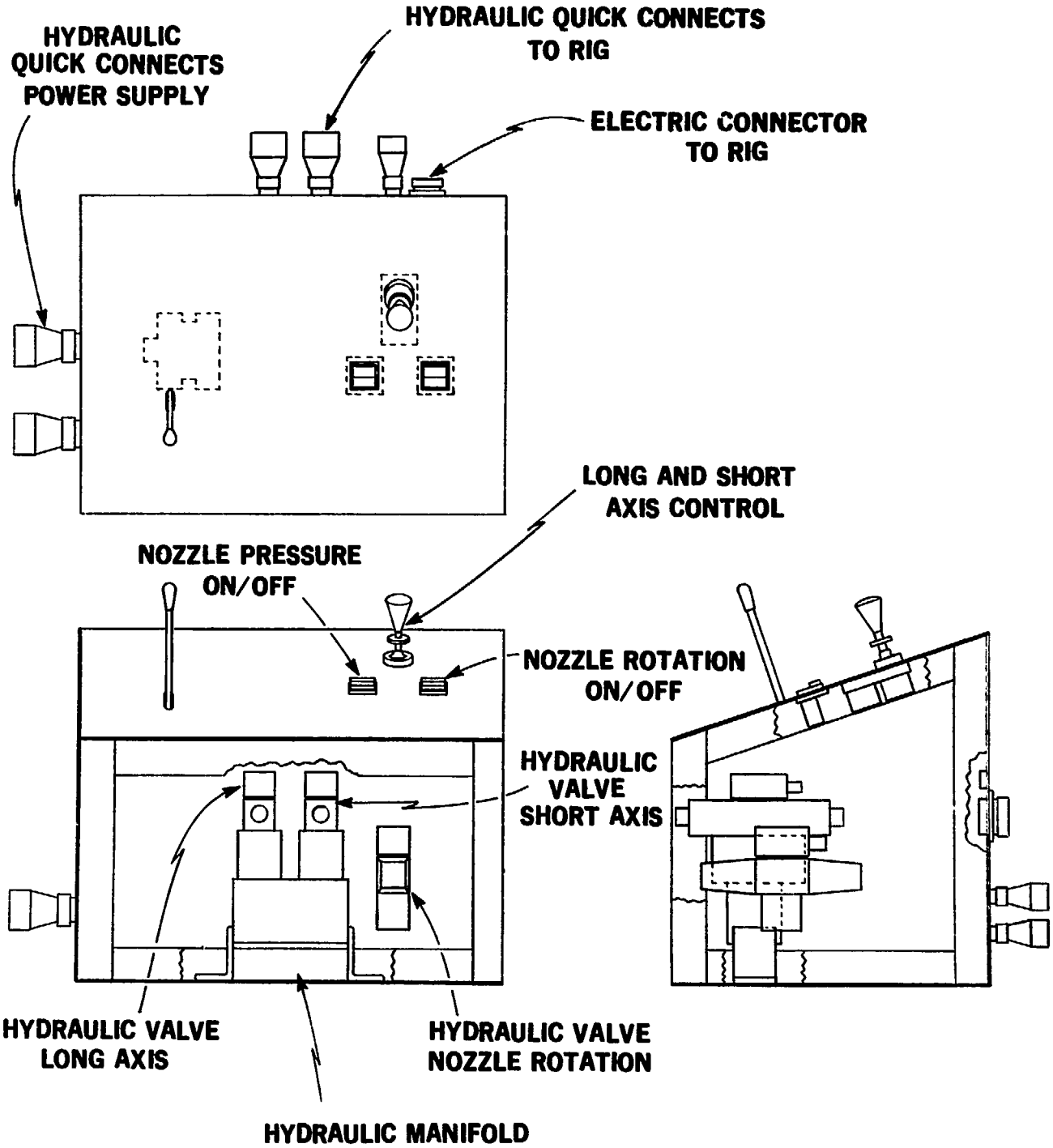

FIGURE 11 CONCRETE REMOVAL UNIT CONTROL STATION

BEST DOCUMENT AVAILABLE

the fluid to the hydraulic motor which causes the long axis movement. The second valve supplies the fluid to the motor which generates the short axis carriage movement. Two lines run from the valves to the motor; each is fitted with a flow control valve to regulate speed and quick connects for hose removal. The third valve supplies fluid to the rotary seals. A flow controller is located in the tank port of this valve which controls the speed of rotation of the nozzles. All fluid from this system returns to tank and passes through a filter. FIGURE 12 is the fluid power diagram.

The electrical system originates at the truck. Power for the system is taken off the electrical system from the truck (12VDC). The power line on the truck consists of a fuse and cable running between the fuse box and the junction box located on the junction station. A connector is fixed to the outside of the box. A cable runs between the junction box and the control station supplying power to the control station. A terminal strip distributes power to each switch. A four position switch which controls the movement of the long and short axis is connected to the two valves. The power from these switches passes through normally closed limit switches that are located on the concrete removal rig. These switches are normally closed limit switches which are actuated when maximum travel of the long or short axis is reached, causing the hydraulic valve to de-energize. A two way start/stop switch is used to control the valve which controls nozzle rotation. A third switch is used to divert the high pressure water from the cutting heads to a nozzle of equivalent area located in the valve outlet. FIGURE 13 is an electrical wiring diagram of the system.

3.3 High Pressure Water System

The high pressure pump was installed on the frame of the truck. It was situated in such a way as to allow ease of maintenance on all parts.

The high pressure pump must be supplied at all times with

BEST DOCUMENT AVAILABLE

BEST DOCUMENT AVAILABLE

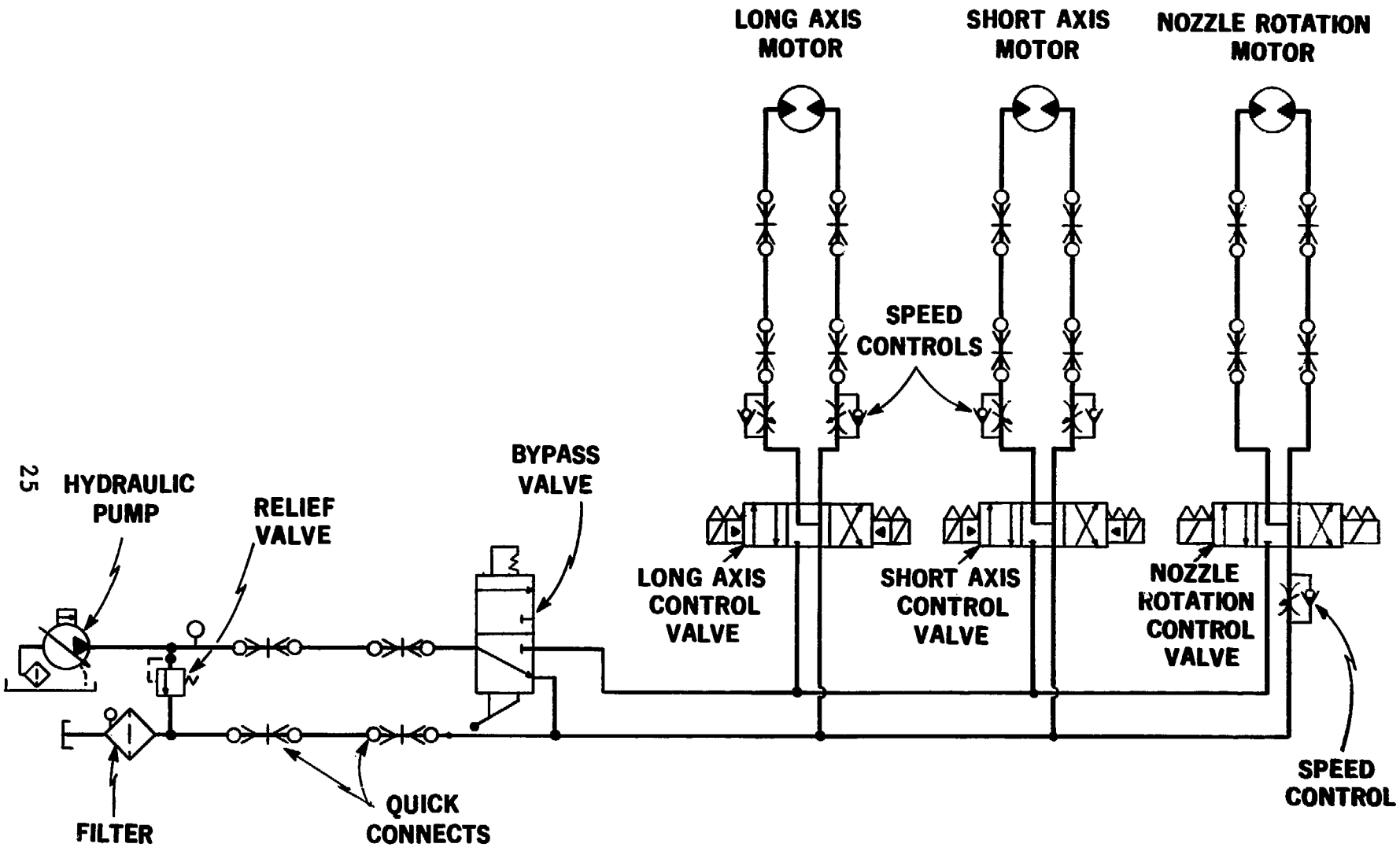

FIGURE 12 FLUID POWER DIAGRAM OF THE CONCRETE REMOVAL UNIT

BEST DOCUMENT AVAILABLE

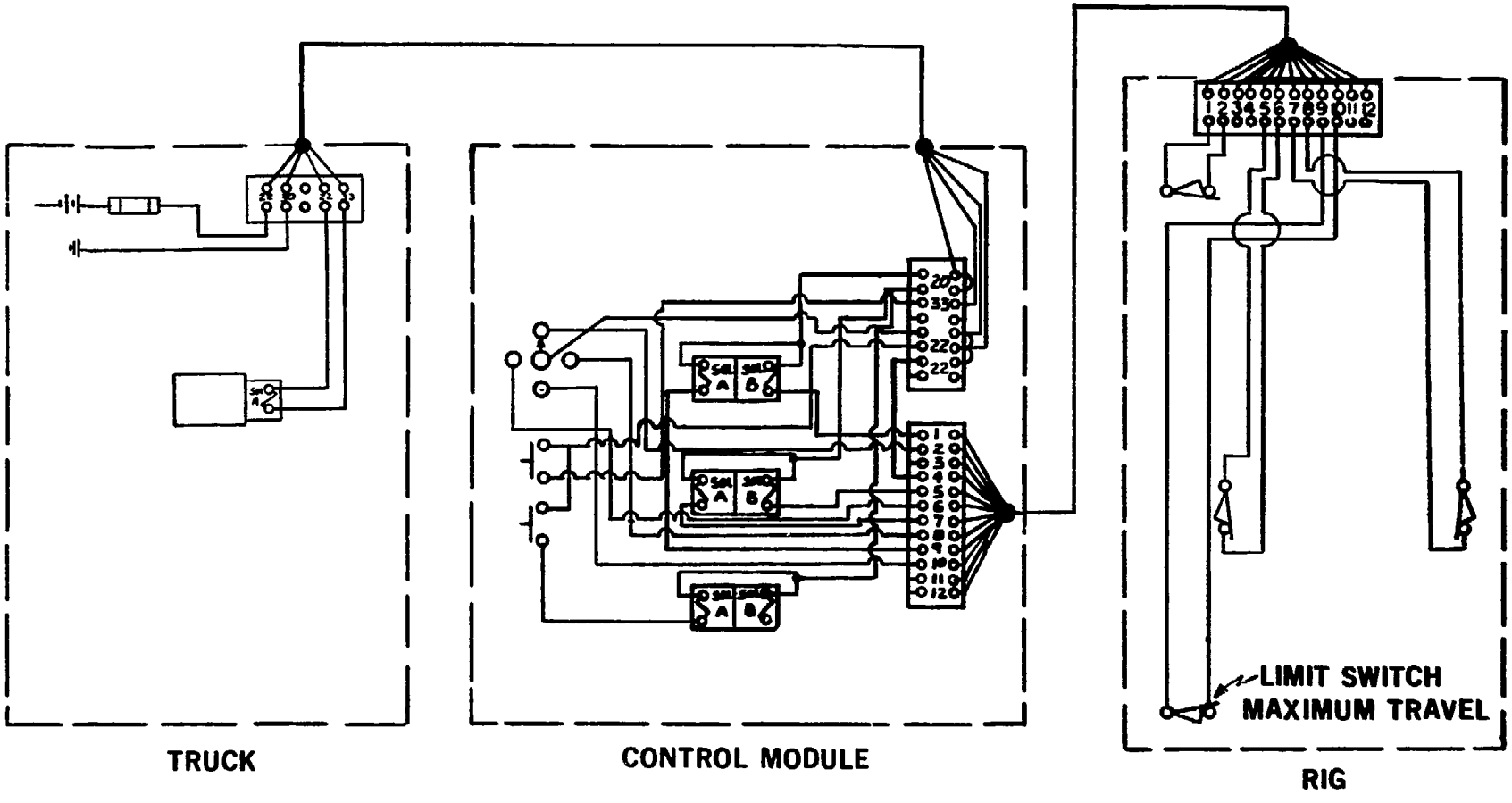

FIGURE 13 ELECTRICAL WIRING DIAGRAM OF THE CONCRETE REMOVAL UNIT

26

low pressure water in order to operate. Supply water passes through a filter canister located on the pump skid and flows up to the surge/holding tank. Water from the tank outlet flows directly into the high pressure pump inlet. The pump is a Wheatly Quinteplex Plunger pump which generates the high pressure water. A rupture disc is situated on one end of the pump manifold which will rupture due to high pressure surges. These discs can be purchased at various pressure ratings. The high pressure discharge flows into a distribution manifold located at pump outlet. The distribution block is equipped with a gauge and a high pressure control valve used to regulate pressure. A 1/2 inch diameter (12.7 mm) discharge line runs from the distribution manifold to the high pressure valve. This valve is a three way valve equipped with a nozzle on one outlet and hose running to the concrete removal rig. The nozzle in this valve must be at a minimum the equivalent area or larger than the combined area of the nozzles in the removal rig. This valve is actuated by air supplied through the brake line. A switch on the control station controls a solenoid valve which allows air to actuate the valve. In the unactuated position, the water is flowing through the nozzle on the valve and back to the tank.

The high pressure hose supplying the concrete removal rig ties into the high pressure junction manifold located on the top of the nozzle carriage. From this manifold, water is supplied to the two rotating seals by two separate hoses. These hoses each connect to the rotary seals. The nozzle manifolds are connected to the spindles of the rotary seals and the nozzles are mounted in the manifold.

FIGURE 14 illustrates the layout of the high pressure water system.

3.4 System Testing and Fine Tuning

The testing of the unit involved determining the proper rotational and feed speeds. The angle of nozzle impingement with the surface of the concrete was also varied, this was done in

AVAILABLE

BEST DOCUMENT AVAILABLE

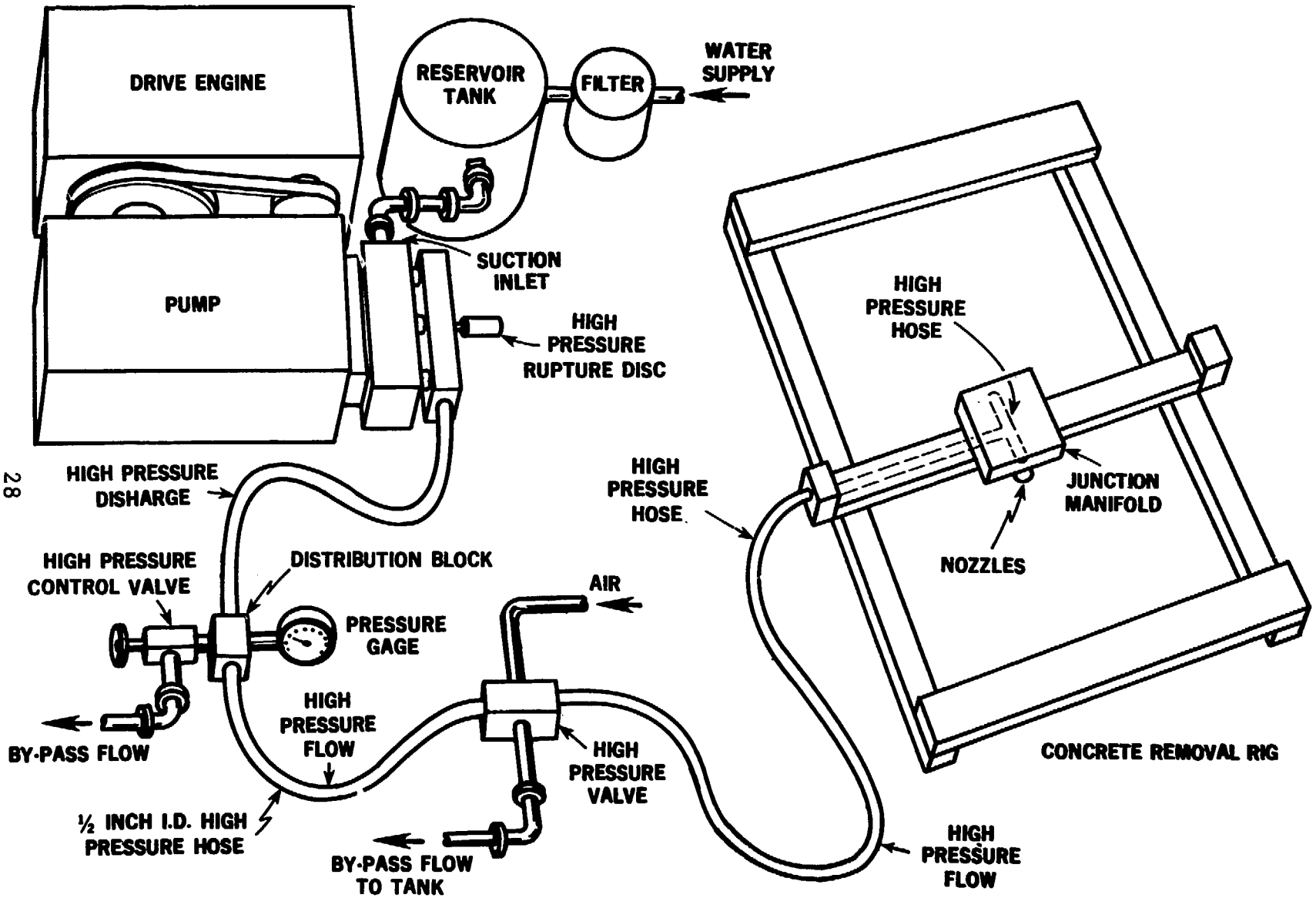

FIGURE 14 HIGH PRESSURE WATER SYSTEM FOR CONCRETE REMOVAL

order to achieve maximum removal rates and clearance for nozzle heads. Three nozzles were also selected to be evaluated, .060, .052, and .047 inch diameter (1.52, 1.32, and 1.19 mm). These four variables were considered in order to determine the optimum concrete removal rate. FIGURE 15 is a chart indicating the results of these tests for system optimization. The three nozzles tested were the .047, .052, and .060 inches in diameter respectively (1.19, 1.32, 1.52 mm). The selection of nozzles was based upon the use of 100 percent of the pump's flow at maximum pump pressure. The pump is capable of operating four .047 inch diameter (1.19 mm) nozzles or two .060 inch diameter (1.52 mm) nozzles. From the completed optimization of the nozzles, it is apparent that the .060 inch diameter (1.52 mm) nozzles would provide the system with the optimum nozzle for concrete removal. The flow of the three candidate nozzles is represented in FIGURE 16. In similar tests on the FHWA supplied river bed gravel slab the .047 (1.19 mm) nozzle reached a depth of .75 inches (19.1 mm), the .052 (1.32 mm) reached a depth of 1.30 inches (33 mm) and the .060 (1.52 mm) reached a depth of 1.5 inches (38 mm). This test was accomplished with a single head. Due to the results of this test, it was decided to complete the remaining test with the .060 (1.52 mm) nozzle.

The angle of nozzle impingement was evaluated at four different angles - 10^0 degrees, 20^0 degrees, 30^0 degrees, and 45^0 degrees. This was done in order to achieve maximum depth and cut a path wide enough for the heads to penetrate the surface for a second pass. The second pass would be needed to achieve maximum depth. This pass would be run off the surface of the first layer of reinforcement steel. The flow of the two .060 (1.52 mm) nozzles at maximum pump pressure (12,000 psi - 828 BAR) is 18.4 gpm (70 lpm).

To determine the optimum nozzle angle, the nozzle advance rate and rotational speeds were maintained at a constant. The rotational speed was 30 revolutions per minute (rpm) and the

BEST DOCUMENT AVAILABLE

30 BEST DOCUMENT AVAILABLE

TEST NUMBER	NOZZLE CONFIGURATION	NUMBER OF NOZZLES	NOZZLE ANGLE (DEGREES)	ADVANCE RATE (FT/MIN)	ROTATIONAL SPEED (RPM)	PRESSURE (PSI × 1000)	AVERAGE CUT DEPTH (FEET)	WIDTH OF CUT (INCHES)	TYPE OF CONCRETE
1	0.047	2	20	1	30	10	0.75	6	RIVER BED GRAVEL
2	0.052	2	20	1	30	10	1.3125	6.125	RIVER BED GRAVEL
3	0.060	2	20	1	30	10	1.50	6.125	RIVER BED GRAVEL
4	0.047	2	10	1	30	10	0.125	6	DAI TEST PAD
5	0.047	2	30	1	30	10	0.145	6	DAI TEST PAD
6	0.047	2	20	1	30	10	0.1875	6	DAI TEST PAD
7	0.052	2	30	1	30	10	0.40	6.125	DAI TEST PAD
8	0.052	2	20	1	30	12	0.56	6.125	DAI TEST PAD
9	0.060	2	20	1	30	12	0.685	6.125	DAI TEST PAD
10	0.047	4	20	1	30	10	0.125	12.25	DAI TEST PAD
11	0.060	2	30	1	30	12	0.50	6.3	DAI TEST PAD
12	0.060	2	20	1	35	12	0.625	6.3	RIVER BED GRAVEL
13	0.060	2	20	.5	30	14	0.75	6.3	DAI TEST PAD
14	0.050	2	20	.5	30	14	0.6875	6.3	DAI TEST PAD
15	0.060	1	20	.5	60	12	0.4375	6.0	DAI TEST PAD
16	0.060	2	20	.5	30	12	0.97	6.3	LIMESTONE
17	0.060	2	20	.5	50	12	1.13	6.3	LIMESTONE
18	0.060	2	20	.5	60	12	1.23	6.3	LIMESTONE
19	0.060	2	20	.5	80	12	1.40	6.3	LIMESTONE
20	0.060	2	20	.5	90	12	1.20	6.3	LIMESTONE
21	0.060	2	45	.5	30	12	0.50	6.3	LIMESTONE
22	0.060	2	10	1	30	12	0.42	6.125	DAI TEST PAD
23	0.060	2	20	.5	70	12	1.32	6.3	LIMESTONE

DAI TEST PAD - 3,000 PSI COMPRESSED STRENGTH , AIR ENTRAINED 1 IN. = 2.54 CM 14.5 PSI = 1 BAR

FIGURE 15 0.125 STANDOFF TEST RESULTS OF CONCRETE REMOVAL UNIT OPTIMIZATION

BEST DOCUMENT AVAILABLE

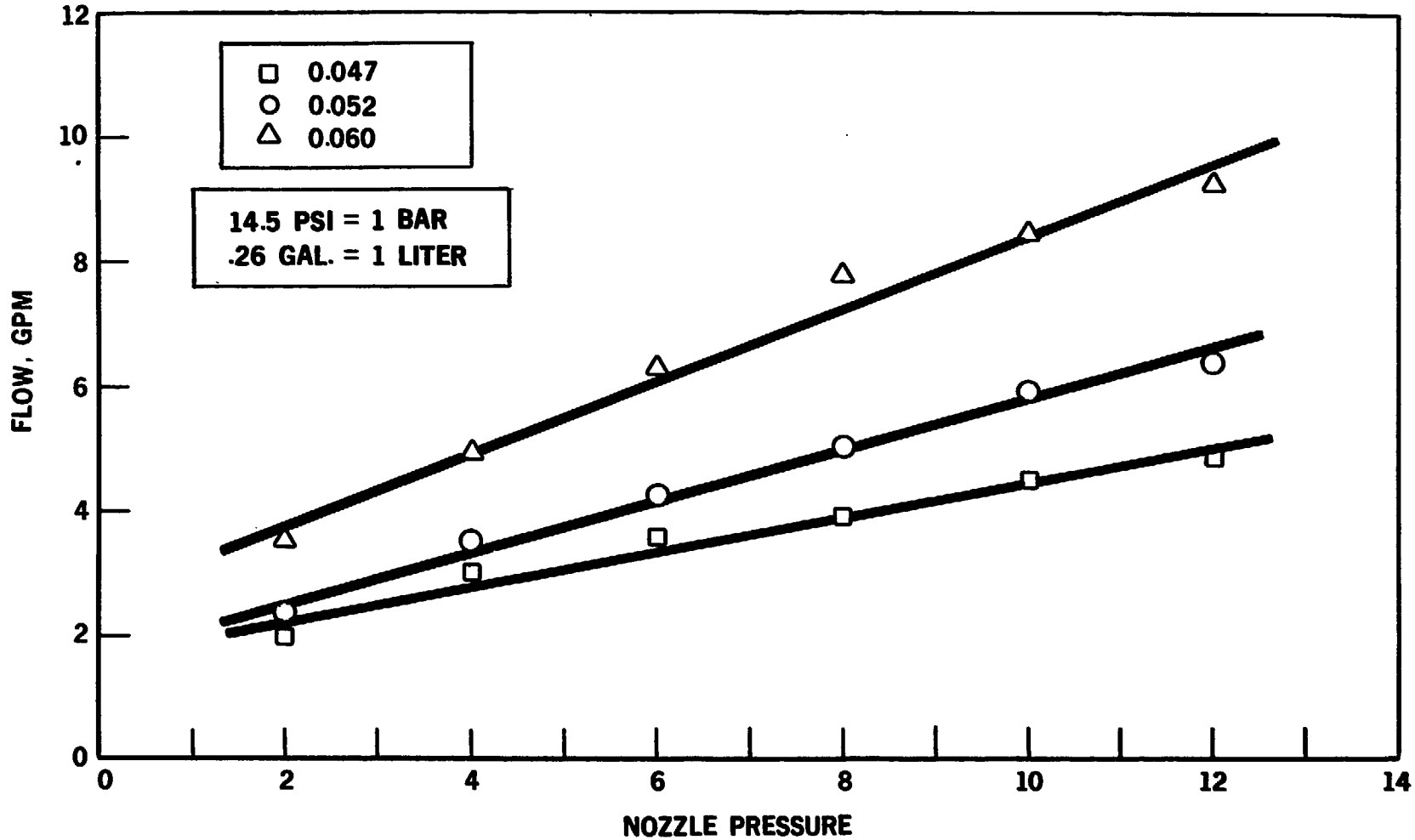

FIGURE 16 NOZZLE FLOW AS A FUNCTION OF NOZZLE PRESSURE

advance rate was 1 foot per minute (fpm), (.305 m per minute). Test results indicated that the 20° degree impingement angle proved to be the optimum angle. The width of the path cut with a 10° degree nozzle was 6.125 inches (155 mm) as opposed to 6.30 inches (160 mm) for the 20° degree nozzles. Nozzle standoff for these tests was maintained at .125 inches (3.2 mm). FIGURE 17 is a graphic representation of the tests for optimum nozzle impingement angle. The tests for optimum nozzle angle were conducted on the DAI Test Pad.

In order to find the optimum nozzle rotational speed, the .060 inch diameter (1.52 mm) nozzle was used on the 20° nozzle head, the advance rate was 1/2 fpm (152 mm per min.) Rotational speeds were varied from 30 rpm to 90 rpm. The tests were conducted on the FHWA Supplied Limestone Sample. Results indicated that 80 rpm was the optimum rotational speed. FIGURE 18 represents the results of the nozzle rotational speed tests. FIGURE 19 is a photographic representation of the DAI Test Pad and Concrete Removal Unit.

The conclusions drawn from these tests indicated that four .047 inch diameter (1.19 mm) nozzles or two .060 inch diameter (1.52 mm) nozzles operating at 12,000 psi (828 BAR) would be the maximum nozzle configuration that the high pressure pump could operate efficiently. Rotational speed as increased improved the removal rate up to 80 rpm, then decreased thereafter. The acceptable nozzle angle was between 20° and 45° in order to allow clearance for the head, but the 20° produced the best depth penetration. The configuration that was used on the field test would be one .060 inch diameter (1.52 mm) in each head on a 20° angle rotating at 80 rpm. It was determined that the slower the nozzles pass over the concrete, the deeper the nozzles would penetrate. At the conclusion of these tests, the unit was ready for transportation to the field demonstration site.

BEST DOCUMENT AVAILABLE

BEST DOCUMENT AVAILABLE

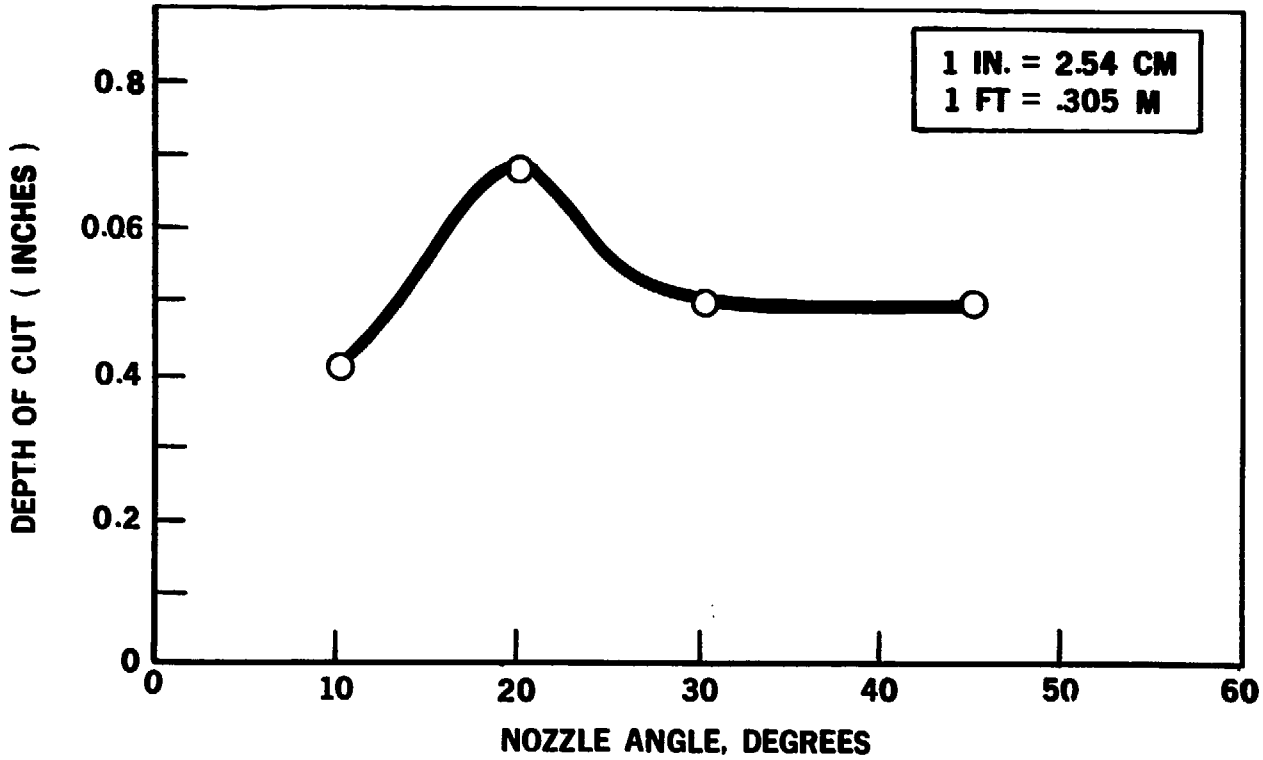

FIGURE 17 DEPTH OF CUT AS A FUNCTION OF NOZZLE ANGLE FOR THE 0.060 NOZZLE, ROTATIONAL SPEED 30 RPM, ADVANCE RATE 1 FT/MIN. CONDUCTED AT DAI TEST PAD

BEST DOCUMENT AVAILABLE

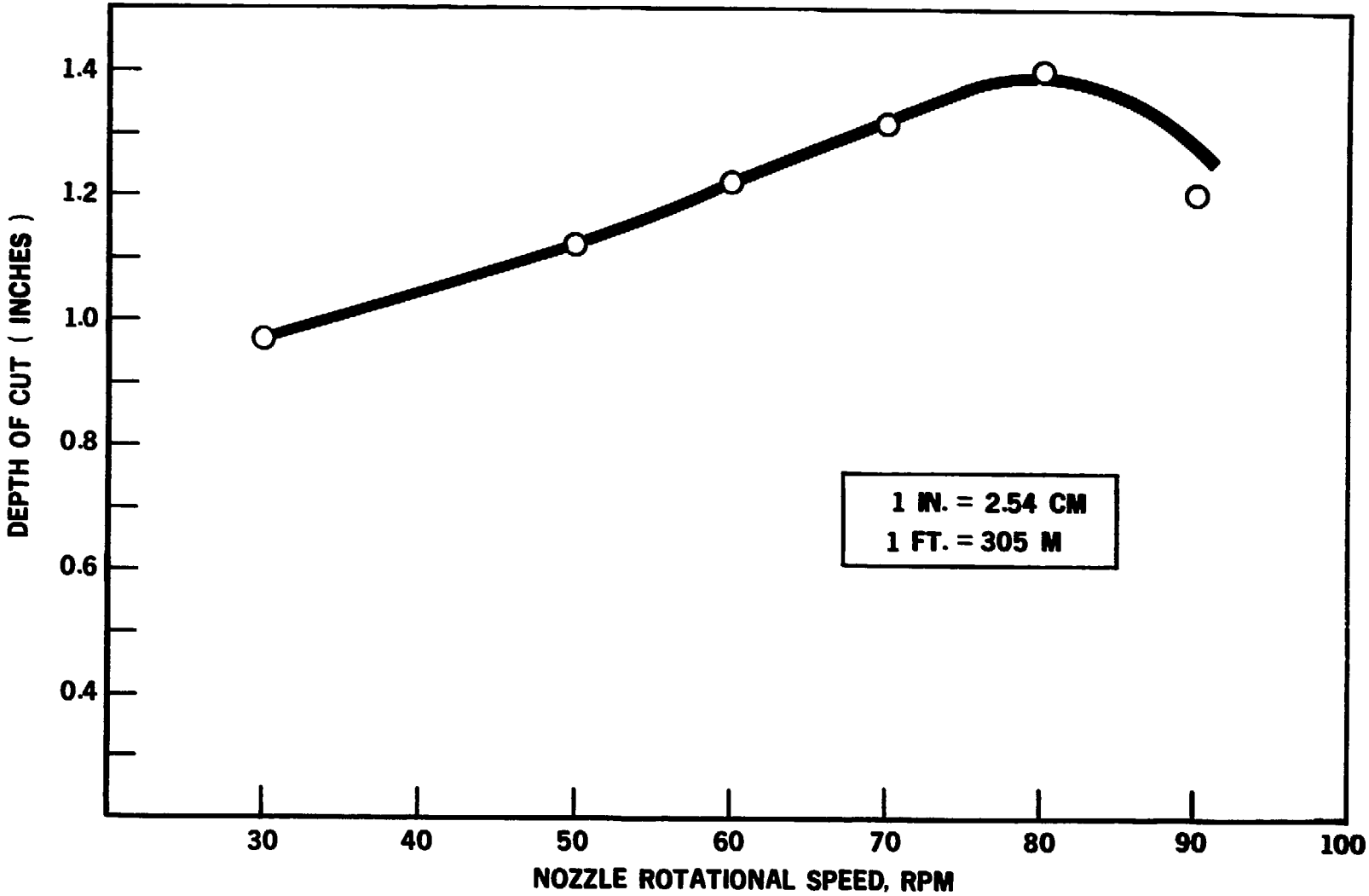

FIGURE 18 DEPTH OF CUT AS A FUNCTION OF NOZZLE ANGLE FOR THE 0.060 NOZZLES AT 20 DEGREE ANGLES, ADVANCING .5 FT/MIN. CONDUCTED ON LIMESTONE SAMPLE

BEST DOCUMENT AVAILABLE

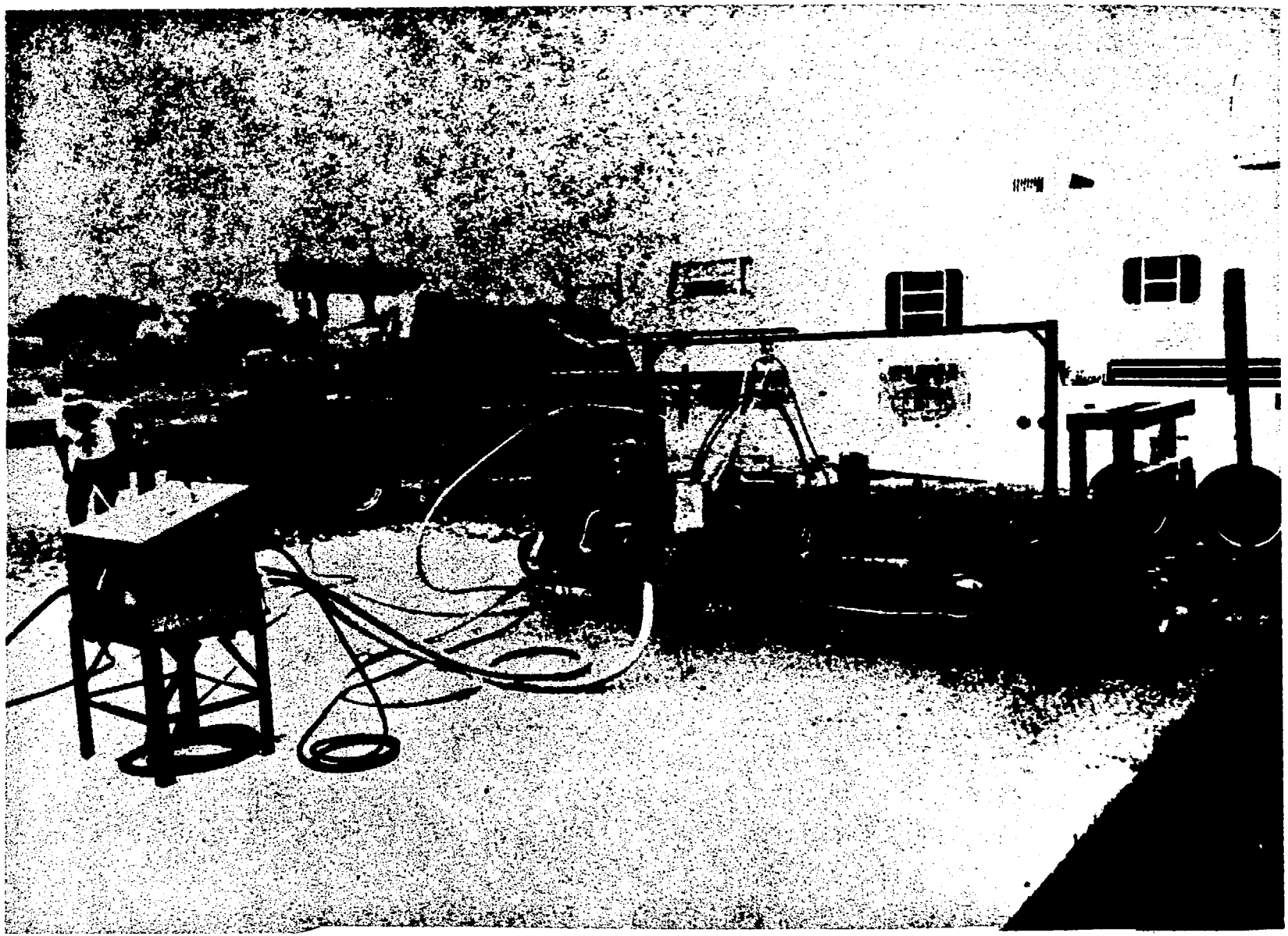

FIGURE 19 TEST PAD AND CONCRETE REMOVAL UNIT

4.0 DEMONSTRATION OF PROTOTYPE

The demonstration of the prototype concrete removal unit occurred during the week of October 18 through October 21, 1982. The following is an overview of the development and execution of this field demonstration.

The site selection and initial contact with the state authorities was accomplished by the Federal Highway Administration (FHWA). A meeting was held on September 24, 1982, at the proposed demonstration site. This site was a tidal bridge on Route 629 over the Mattaponi River in King and Queen County, Virginia. Those in attendance were all who would be concerned with the bridge repair work from the District Bridge Engineer to the Road and Bridge Maintenance Superintendent. Mr. John K. McEwen was the Saluda Residency Engineer who whould be responsible for overseeing the bridge repair.

It was decided at this meeting that the demonstration would be a joint program with DAI responsible for removing the concrete and the Virginia Department of Highway and Transportation (VDH&T) Fredericksburg District Bridge maintenance crew repairing the bridge deck after the concrete was removed. Mr. White (Principal Coordinator) and Mr. Harper (Residency Road and Bridge Superintendent) would be in charge of the highway work crew.

The following is an account of the events which took place during the field demonstration. The recorded data does not include all of the concrete removal that was accomplished in this demonstration. Due to this being an actual job and the bridge repair needing to be completed as soon as possible it was not possible to set up separate tests to evaluate different configurations for the cutting unit.

Upon arriving at the demonstration site, DAI personnel met with Mr. Harper and Mr. Mills of the Virginia Highway road crew. We were briefed on the location of the area and the depth to be removed. The equipment was set up in little or no time with the help of the state crew. The concrete removal unit was placed on

BEST DOCUMENT AVAILABLE

the first area to be repaired. One pass was made with dual heads, and four .047 (1.19 mm) nozzles. FIGURE 20 shows the concrete removal unit in operation. The result was the removal of an area 12-1/4 inches (311 mm) wide, 36 inches (914 mm) long and 1/4 inch (6.3 mm) to 1/2 inch (12.7 mm) in depth. We then changed to a single head, and two .060 (1.52 mm) nozzles at the same advance speed, 1 ft/min. (.304 m/min.). The result was an area 36 inches long (914 mm), 6-1/2 inches wide (165 mm), and 2 to 2-1/2 inches (50.8 mm to 63.5 mm) in depth. The first area was finished to a depth of 3 inches (76.2 mm), 36 inches (914 mm) long, and 30 inches (762 mm) wide.

The equipment was then moved to a new area which was large enough to use the full travel of the rig's cutting head. The first pass using a single head with two .060 (1.52 mm) nozzles took 4.67 minutes. The size of the area removed was 8 inches (203 mm) wide, 72 inches (1.83 m) long, and 2 inches deep (50.8 mm). FIGURE 21 shows the cutting heads in operation. It took 30.5 minutes to traverse the full area of the rig. An area 30 inches (762 mm) wide, 72 inches (1.83 m) long, and 3 inches (76 mm) deep was removed. The rig was relocated adjacent to make the last cut and removed an area 32 inches (813 mm) wide, 72 inches (1.83 m) long, and 3 inches (76 mm) deep in 30.9 minutes.

At this time the short axis of the scarfing unit was re-aligned. The misalignment was caused by debris accumulating in belts and pulleys causing slippage. This involved removing the belt guard and the screw drive timing belt. The short axis was realigned and belt/belt guard were replaced. The nozzle drive shield was also cleaned and replaced.

The following day, October 19, 1982, the single head was replaced with dual heads, with one .060 (1.52 mm) nozzle on each head. The operation was started on an adjacent area. An area 40 inches (1.01 m) wide, 60 inches (1.53 m) long and 3 inches (76 mm) deep was removed in 18.25 minutes.

The short axis was realigned and the belt guard covered

BEST DOCUMENT AVAILABLE

BEST DOCUMENT AVAILABLE

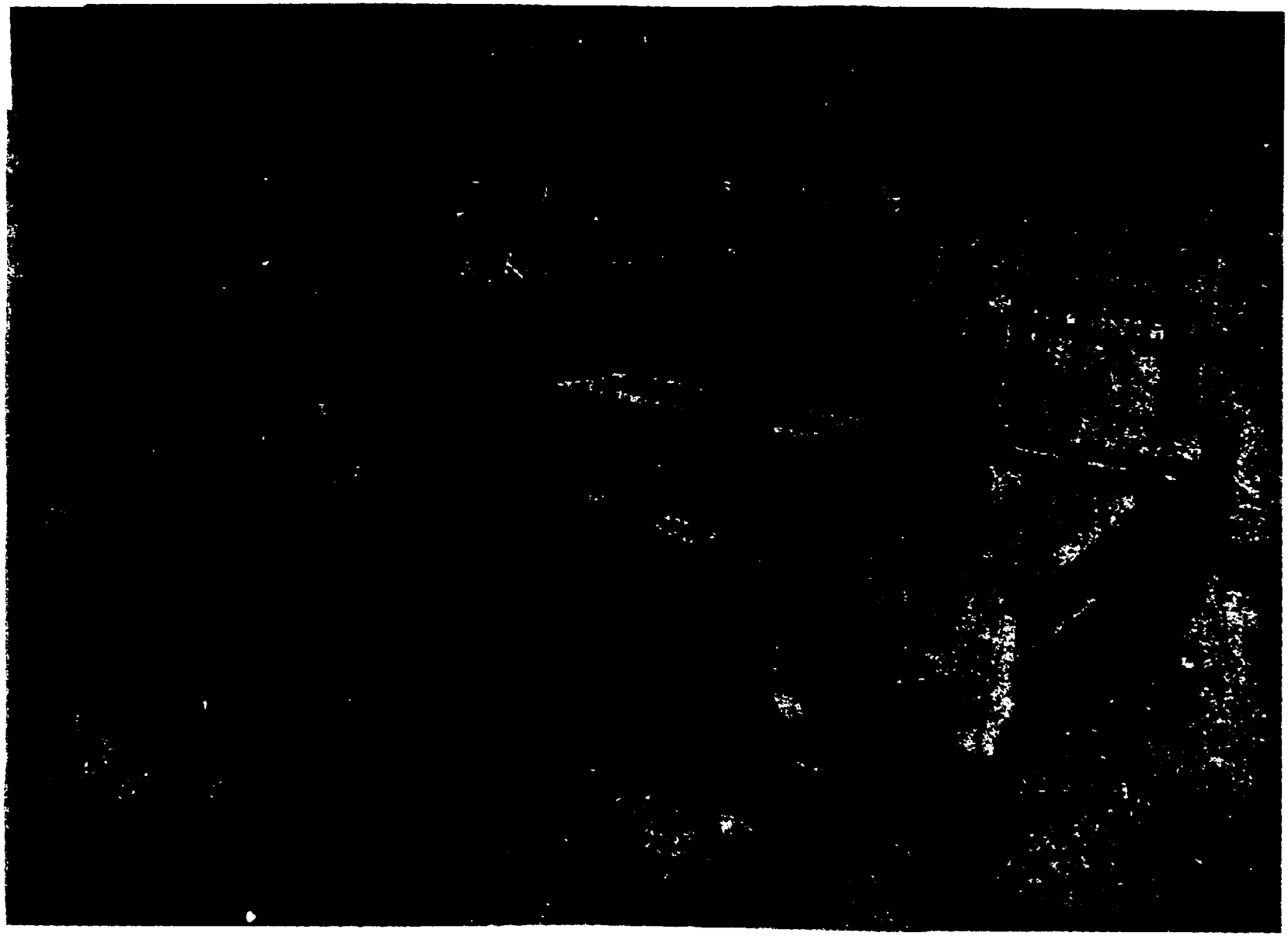

FIGURE 20 CONCRETE REMOVAL UNIT IN OPERATION

BEST DOCUMENT AVAILABLE

FIGURE 21 CUTTING HEADS IN OPERATION

with plastic. This was done to keep grit and rocks out of the belt and sheaves. Work was initiated on an adjacent area 40 inches (1.01 m) wide, 80 inches (2.03 m) long. A 3 inch (76 mm) deep section of concrete was removed in 24.2 minutes. Penetration of the full 8 inch (203.3 mm) depth was made near the joint. FIGURE 22 shows the area of concrete removed to full depth. The second and third areas were finished and the equipment was moved to the fourth area which was 13.2 inches (336 mm) wide, 70 inches (1.78 m) long and 2.52 inches (64 mm) deep.

This finished up the east side of the bridge and had taken one and one-half days to complete.

The next day, October 20, 1982, was used by the VDH&T crew to patch the holes so that traffic could be diverted to that lane. DAI used this day to clean the rig and be ready to start the next day. The belt guard was recovered with plastic and replaced. Screws were cleaned and oiled, the nozzle drive cover was removed and cleaned and the nozzle heads were realigned and tightened.

On October 21, 1982, the east side of the bridge was cleaned up and traffic diverted from the west side to the east side. The rig was placed on the first area and started. The equipment encountered DuraCal which is a fast-setting concrete and removed 1/2 inch (12.7 mm) of concrete during the initial pass. The first area cleaned took 22 minutes, was 44 inches (1.18 m) wide, 72 inches (1.83 m) long and 3 inches (76 mm) deep. The volume removed was 5.49 cubic feet (0.16 m^3) which provided an hourly removal rate of 16.47 $feet^3$ (1.53 m^3) per hour. Adjacent areas were then removed. FIGURE 23 shows the westbound lane after concrete removal operations.

4.1 Assessment of Field Demonstration

As demonstrated during the field evaluation, the use of high pressure cavitating water jets is a very cost-effective method for the removal of deteriorating concrete on bridge decks. It was demonstrated that by the use of the water jets the adjacent concrete that was not required to be removed was not damaged

BEST DOCUMENT AVAILABLE

BEST DOCUMENT AVAILABLE

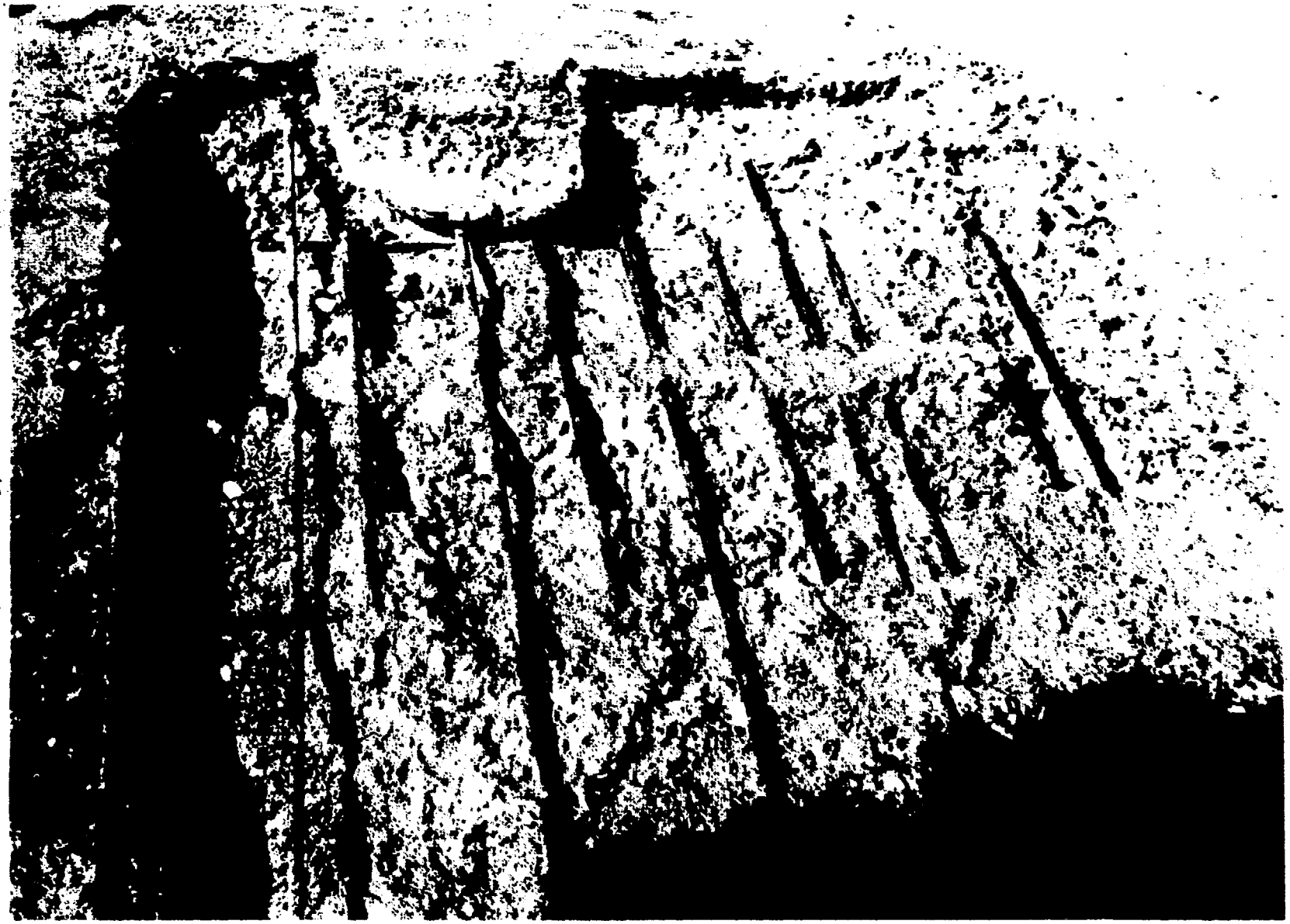

FIGURE 22 CONCRETE REMOVED TO FULL DEPTH

BEST DOCUMENT AVAILABLE

FIGURE 23 BRIDGE AFTER CONCRETE WAS REMOVED

or disturbed due to the vibration of the concrete which occurs during the use of impact removal techniques. With present techniques it is possible to crack the concrete or cause the reinforcing steel and concrete to separate in an adjacent area of the deck that was intact before removal operations began.

Data was collected during the field demonstration in seven different areas where damaged concrete was removed. FIGURE 24 is a chart which includes the results of these tests. The first test was accomplished with two .060 nozzles (1.52 mm); one nozzle in each head removing a path of 12.25 inches (311 mm) per pass. The removal rate was 8.74 cubic feet per hour (0.25 m^3). As the operator became more familiar with the equipment the rates improved. The last run that was recorded reached removal rates as high as 16.47 cubic feet per hour (0.47 m^3). The advance rate of the cutting heads was determined by the ease of removal of the deteriorated concrete.

During the demonstration, soundings were periodically made by the highway crew to determine if in fact all spoiled material was removed. In most cases, it was found that all spoiled material was removed with the passes made with the cutting head. With further development, it is possible that this system could provide adequate quality control in that it removes only the defective material wherever it is encountered.

The present prototype concrete removal system operated satisfactorily in applying the cavitating nozzles to a concrete removal system. As a functional piece of construction equipment the system has room for improvements. The following is a list of the warranted improvements that resulted from the field tests:

- A better system for transporting the rig to the work site.
- Improved mobility of the removal rig when moving from one area to another on the deck.
- Reduce the amount of translation time required to relocate the cutting head within the removal rig when not cutting.

AVAILABLE

BEST DOCUMENT AVAILABLE

TEST DATE	ELAPSED TIME (MIN)	WIDTH (FEET)	LENGTH (FEET)	DEPTH (FEET)	CUBIC FT	CUBIC FT./ HOUR
10-18	4.67	0.67	6	0 17	0.68	8.74
10-18	30.5	2.50	6	0.25	3.75	7.37
10-18	30.90	2.67	6	0.25	4.00	7.77
10-19	18.25	3.30	5	0.25	4.12	13.55
10-19	24.20	3.30	6.67	0.25	5.50	13.64
10-19	16.1	1.10	6	0.21	1.38	5.14
10-21	20.0	3.66	6	0.25	5.49	16.47

1 FT^3 = .028 M^3 1 FT. = .305 M

FIGURE 24 TEST DATA COLLECTED DURING FIELD DEMONSTRATION

- Improve the shielding of the cutting head to prevent a hazard to personnel and passing traffic from flying debris.
- Improve the capability to work close to curbing, bridge rails, etc.
- Improve the machinery guards and covers to allow maximum work rates.
- Improve the access to nozzle mounts.
- Simplify the hydraulic drive system.
- Reduce the number of hoses that are required.
- Improve the ability to keep the hydraulic system free of impurities.
- Improve the means of adjusting the nozzle height.

BEST DOCUMENT AVAILABLE

5.0 SYSTEM COST ANALYSIS AND SYSTEMS COMPARISON

5.1 SYSTEM COST ANALYSIS

The cost breakdown of the present concrete removal system has been divided into two separate categories which are equipment and operational cost.

Equipment Cost

High Pressure Pump, including valves, hoses and gauges	$ 57,420.00
* Truck modifications	2,000.00
Concrete removal unit, associated hardware and nozzles	65,000.00

* Truck would be purchased to suit system's requirements; the price of the truck is not included.

Operational Cost

Diesel engine high pressure pump		117 hp (87 kw)
		6.3 gph (23.8 lph)
Gasoline engine hydraulic pump		52 hp (39 kw)
		4.7 gph (17.8 lph)
Gasoline engine supply pump		11 hp (8.2 kw)
		.9 gph (3.4 lph)
Total fuel consumption	Diesel	6.3 gph (23.8 lph)
	Gasoline	5.6 gph (21.2 lph)
Cost of diesel fuel		$1.20/gal.
Cost of gasoline		$1.25/gal.
Total cost of fuel per hour of operation		$14.60/hr.

Manpower cost can be figured on the basis of providing two men for the operation of the concrete removal system.

Extrapolation To Full Scale Removal Operation

Assumptions:

- 8 hours per day of operation
- 2 men per day
- 1 pump
- 1 concrete removal system

Optimum removal rate 16.5 ft^3/hr. (0.47 m^3/hr)

BEST DOCUMENT AVAILABLE

Total removal per 8 hour day 132 ft^3 (3.74 m^3)

Total fuel utilized per 8 hour day

Diesel fuel 50.4 gal. (191 l)

Gasoline 44.8 gal. (170 l)

Total fuel cost per 8 hour day $116.48

5.2 SYSTEMS COMPARISON

This data was drawn from National Cooperative Highway Research Program Report 161.

Two techniques currently in use will be analyzed as a comparison to the CONCAVER concrete removal system. It must be kept in mind that the rates are actual cutting rates and do not include set up or relocation from site to site.

5.2.1 Technique: Removal of damaged concrete with a Klarcrete Cutter.

The machine is placed over the damaged area and a series pneumatic hammer or cutters mounted on a frame traverse the area removing approximately 1/3 inch (8.5 mm) of concrete at a time.

5.2.1.1 System Requirements

Equipment: Klarcrete cutter, compressor

Crew: 2 equipment operators

Production Rate: 10.6 cubic ft. per hour (0.30 m^3)

5.2.2 Technique: Removal of damaged concrete with pneumatic hammers (jack hammer).

The area to be removed is outlined by a saw cut. The hammers are used to break up the concrete for removal. The hammers are operated by an operator manually. Before patch is repaired, rebar must be sandblasted.

BEST DOCUMENT AVAILABLE

5.2.2.1 System Requirements

Equipment: Jack hammer and compressor concrete and sand-blasting equipment

Crew: 1 operator per hammer

Removal rates average:

30 lb. hammer (13.6 kg.)	1.86 cubic ft. (0.05 m^3) per hour
60 lb. hammer (27.3 kg.)	8.08 cubic ft. (0.23 m^3) per hour
90 lb. hammer (40.9 kg.)	3.07 cubic ft. (0.09 m^3) per hour

5.2.3 Technique: Removal of damaged concrete with the CONCAVER concrete removal system.

The machine is placed over the damaged area and high pressure cavitating water jets are passed over the concrete. The first pass is capable of removing concrete down to the first layer of reinforcing steel, approximate depth three inches.

5.2.3.1. System Requirements

Equipment: CONCAVER concrete removal system, high pressure pump, hydraulic pump

Water supply pump or tanker

Crew: 2 equipment operators

Production rate average:

14.5 cubic ft. per hour (0.41 m^3)

BEST DOCUMENT AVAILABLE

6.0 CONCLUSIONS AND RECOMMENDATIONS

6.1 Conclusions

The engineering analysis, development and demonstration performed during this program have led to the following conclusions:

1) All deteriorated concrete requiring repair on present highway and bridge decks, can be effectively removed using a CONCAVER system.
2) The CONCAVER system of cavitating high pressure water jets operating in an automated system was demonstrated as a highly efficient concept for a safe cost-effective mechanical concrete removal system.
3) An operating pressure of 12,000 psi (828 BAR) efficiently removed the damaged concrete. No abrasives are required within the CONCAVER system, and no sandblasting of the reinforcing steel is required.
4) The high pressure water jets can be controlled in a self-regulating manner so as to remove only the damaged concrete and leave the remaining concrete and reinforcement intact.
5) The current prototype state-of-the-art concrete removal system functioned effectively as a system in demonstrating and proof testing the technology (CONCAVER water jetting system) for the rapid removal of concrete in actual field conditions.
6) The design of a second generation concrete removal system is recommended. FIGURE 25 is a graphic representation of the proposed DAI CONCAVER concrete removal tool and FIGURE 26 is a graphic representation of the complete system.
7) It is evident that the CONCAVER cavitating concrete removal system is capable of achieving higher and

BEST DOCUMENT AVAILABLE

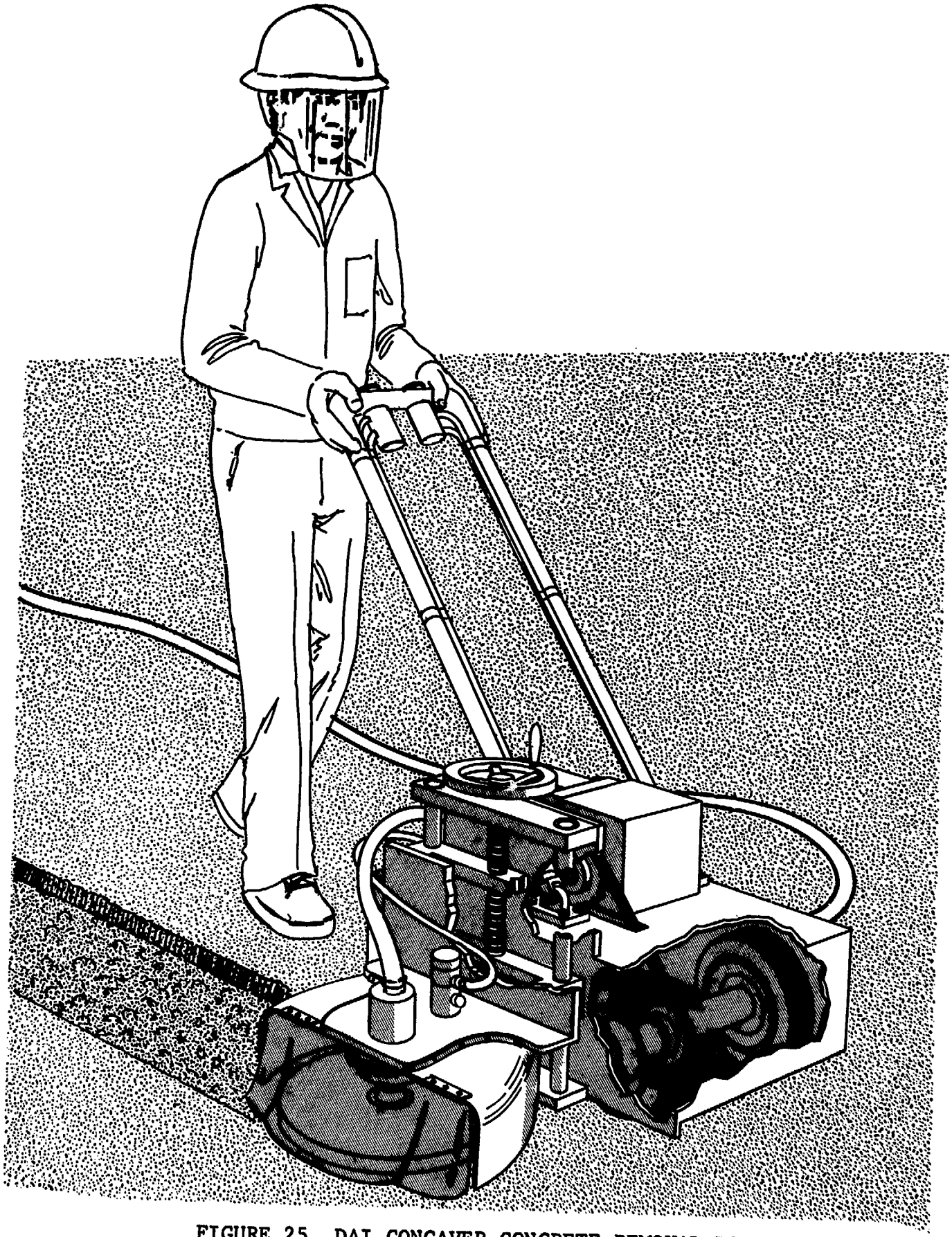

FIGURE 25 DAI CONCAVER CONCRETE REMOVAL TOOL

BEST DOCUMENT AVAILABLE

BEST DOCUMENT AVAILABLE

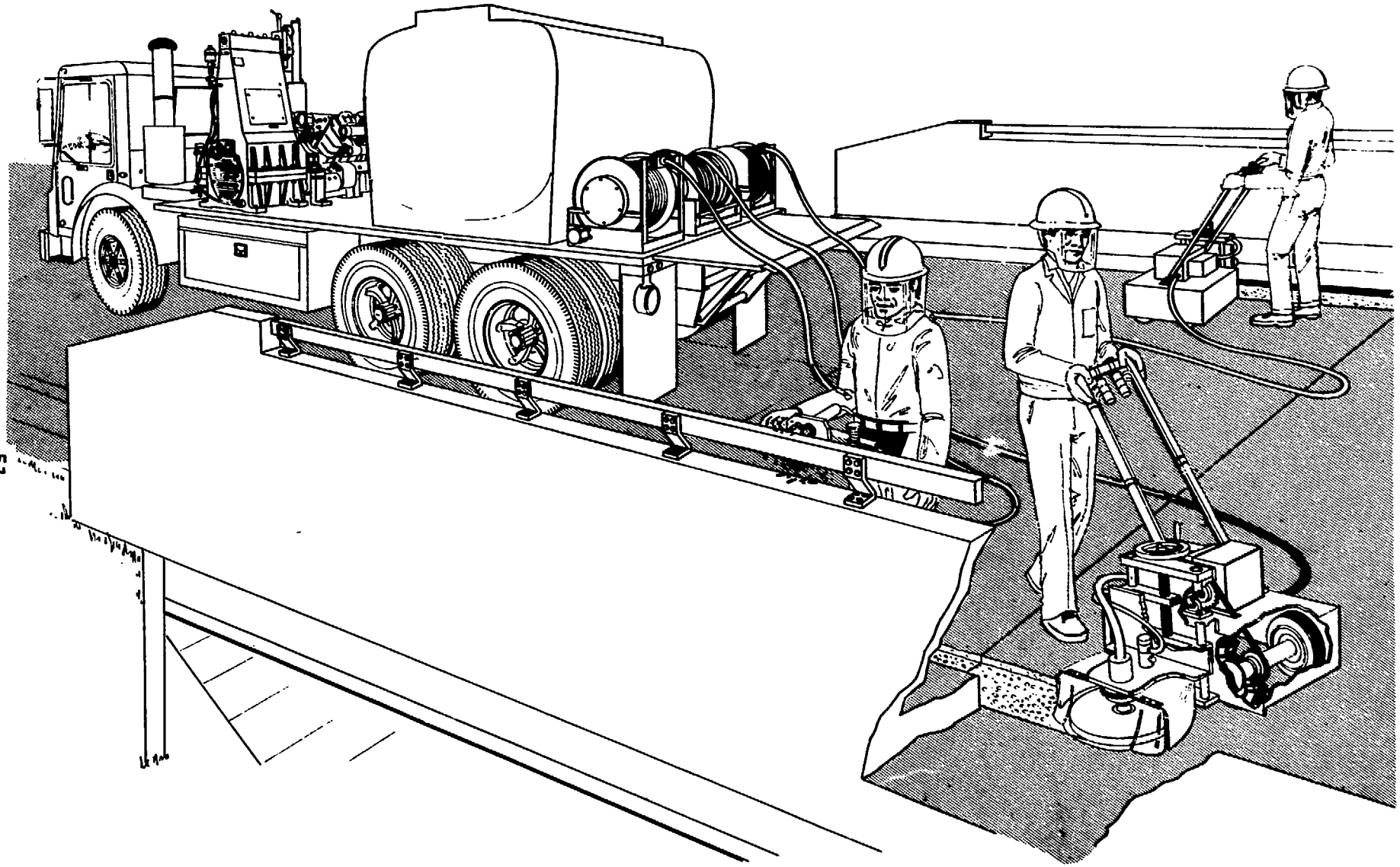

FIGURE 26 DAI CONCAVER CONCRETE REMOVAL SYSTEM

safer removal rates with increased reliability than the present technique based on DAI's brief value engineering study of test results and a reliability review.

6.2 Recommendations

6.2.1 General

The demonstrated system was the CONCAVER technology integrated with designed three-axis system (FIGURE 7).

Because of the number one priority assigned to highway and bridge reconstruction and the realities of budgetary constraints the deployment of cost-effective new technology also warrants a number one priority status. Thus, the following recommendations:

- That FHWA expeditiously deploy a sufficient number of second generation highway and bridge reclamation/repair systems (FIGURE 25) to promote the large scale use of this new technology with its economic advantages.
- That FHWA initiate the development of additional powered tools to augment the bridge concrete removal machine (FIGURE 26) and ancillary equipment as low cost, efficient, alternatives to the present costly methods/equipment in use.
- The FHWA initiate the development of integrated effluent recovery systems for use in sensitive areas.

BEST DOCUMENT AVAILABLE

APPENDIX

OPERATIONS AND MAINTENANCE MANUAL
FOR CONCRETE REMOVAL

1.0 DESCRIPTION OF SYSTEMS OPERATION

1.1 General

The DAEDALEAN ASSOCIATES, Inc. (DAI) concrete removal system was designed to operate at pressures ranging up to 15,000 psi (1034.48 BAR). The high pressure pump produces a maximum pressure of 12,000 psi (8225.59 BAR), when supplying the nozzles designed for the system. The system consists of three sub-systems. They are the self-propelled power module; the control module; and the concrete scarfing module.

1.2 Self-Propelled Power Module

This module is comprised of a Ford truck, a high pressure water pump, a hydraulic pump and ancillary equipment. A power take-off is located on the transmission which drives the hydraulic pump. The pump is a Sperry Vickers PVB29. Since the pump must run off the engine's output, a Venier throttle was installed to regulate rpm. This is located in the cab of the truck. Maximum rpm is 1100. The pump provides the working fluid for the entire system. The fluid for the pump is supplied by a reservoir located on the left side of the truck. The reservoir is equipped with a sight gauge and a thermometer. The level should be no lower than 3/4 full when operating the system. The maximum hydraulic temperature is 200°F. (93.3 C). A ball valve is located in the supply line for ease of pump service. This valve should be shut for emergencies only.

Located on the outlet side of the pump is a relief valve with a maximum setting of 700 psi (48.28 BAR). The relief valve is set at 600 psi (41.38 BAR). The outlet from the relief valve runs to the junction station located at the rear of the truck.

BEST DOCUMENT AVAILABLE

At the junction station, there are two Hansen quick-connects. One is the return to the tank, marked "T", and the other is the system pressure supply, marked "P". A pressure gauge is located at the junction station registering the outlet pressure. From the junction station, a supply and return hose runs to the Control Station. FIGURE A-1 is the fluid power diagram.

1.3 Control Module

The Control Module (FIGURES A-1, A-2, and A-3) consists of four hydraulic valves and a 12-volt DC actuation system. A manually actuated valve labeled the bypass valve is used to divert flow from the system to the tank. This is used to warm up fluid and to stop the system for any reason. When this valve is in the "Rig" position, fluid is being supplied to a manifold in the control station. This manifold has three valves mounted on it. The first valve is the control valve for the long axis movement of the rig. Flow from this valve passes through a flow control valve which limits the flow to a motor. This is responsible for the speed of the long axis movement. The second valve is responsible for the short axis motion. Fluid from this valve also passes through flow control valves. There is a flow control valve in each line enabling a variation of the speed in either direction. Both of these valves are Double-A QF02 valves. The third valve controls nozzle rotation. A flow control valve is located in the tank port which controls rotational speed. This valve is a Sperry Vickers valve. The working parts of these valves are connected to quick-connects located on the outer shell of the control station. The quick-connects are coupled by 15 foot lengths (4.57 meters) of hose to the concrete removal rig.

Three motors are located on the rig. One drives a ball screw which drives the nozzle carriage in the long axis. The other drives a ball screw which drives the nozzle carriage in the short axis. Both of these motors are Char-lynn 300 series. The third motor is a Lamina 100 series. This motor drives the rotary seals which causes the nozzles to rotate.

AVAILABLE

BEST DOCUMENT AVAILABLE

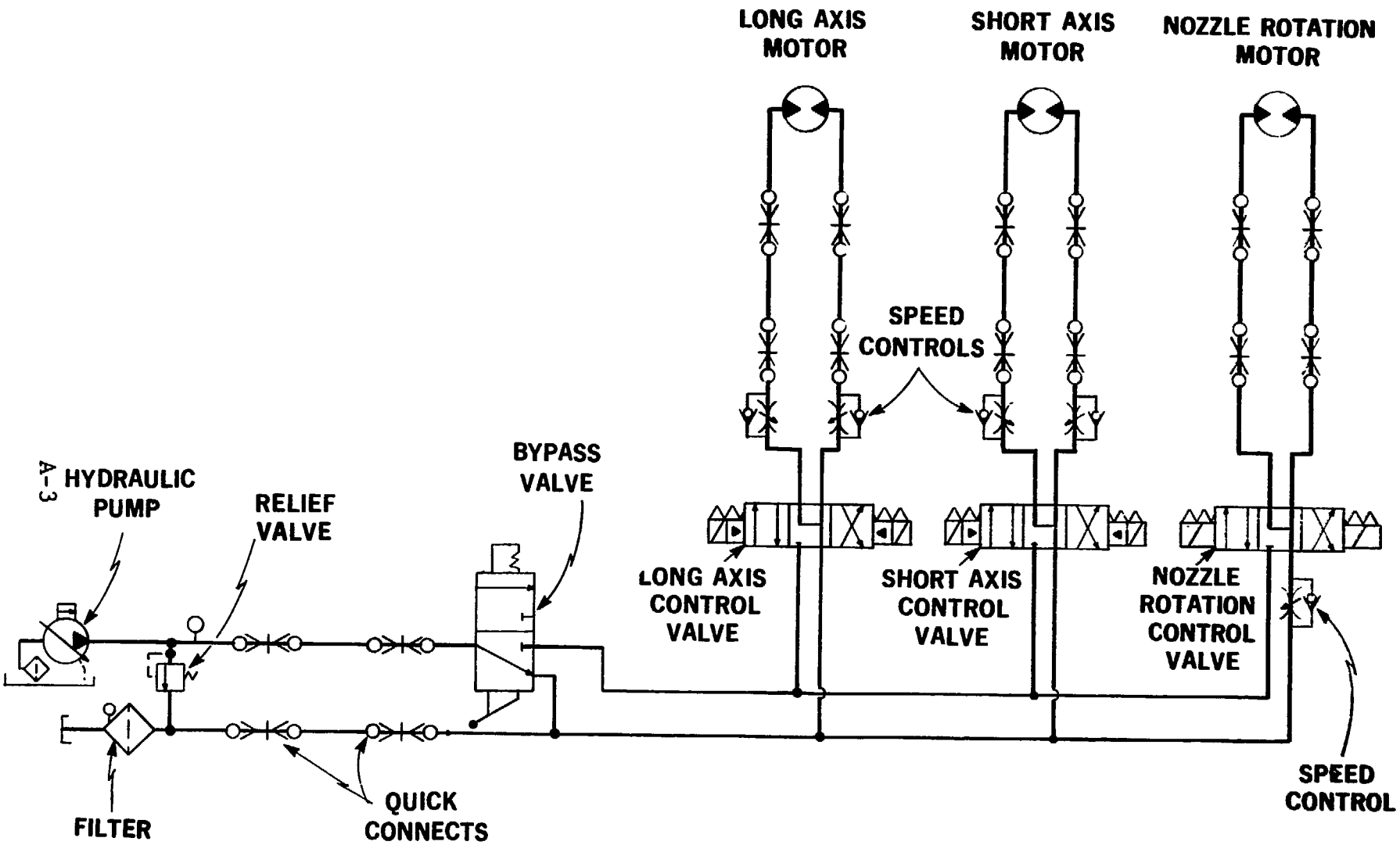

FIGURE A-1 FLUID POWER DIAGRAM OF THE CONCRETE REMOVAL UNIT

BEST DOCUMENT AVAILABLE

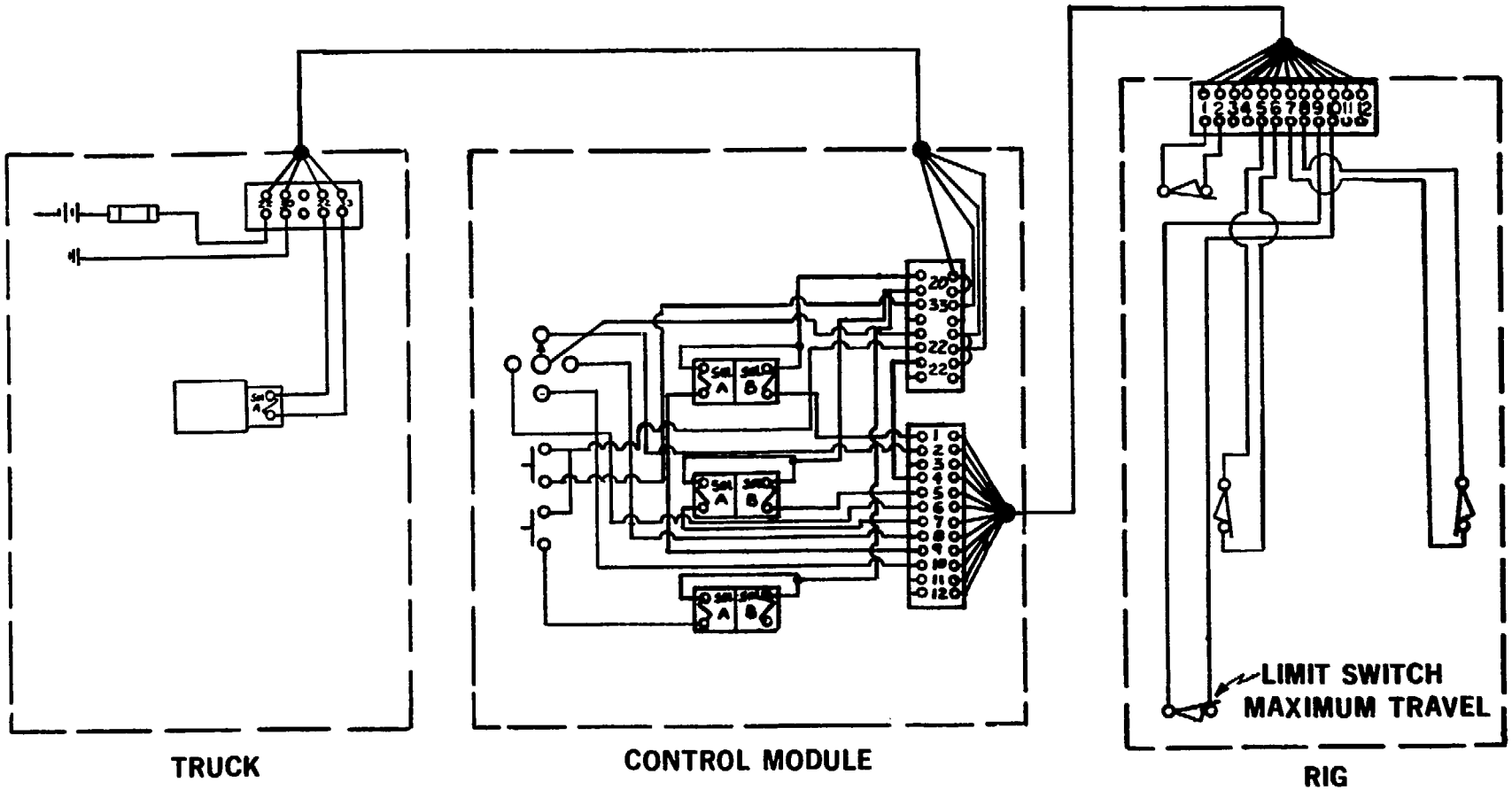

FIGURE A-2 ELECTRICAL WIRING DIAGRAM OF THE CONCRETE REMOVAL UNIT

57 BEST DOCUMENT AVAILABLE

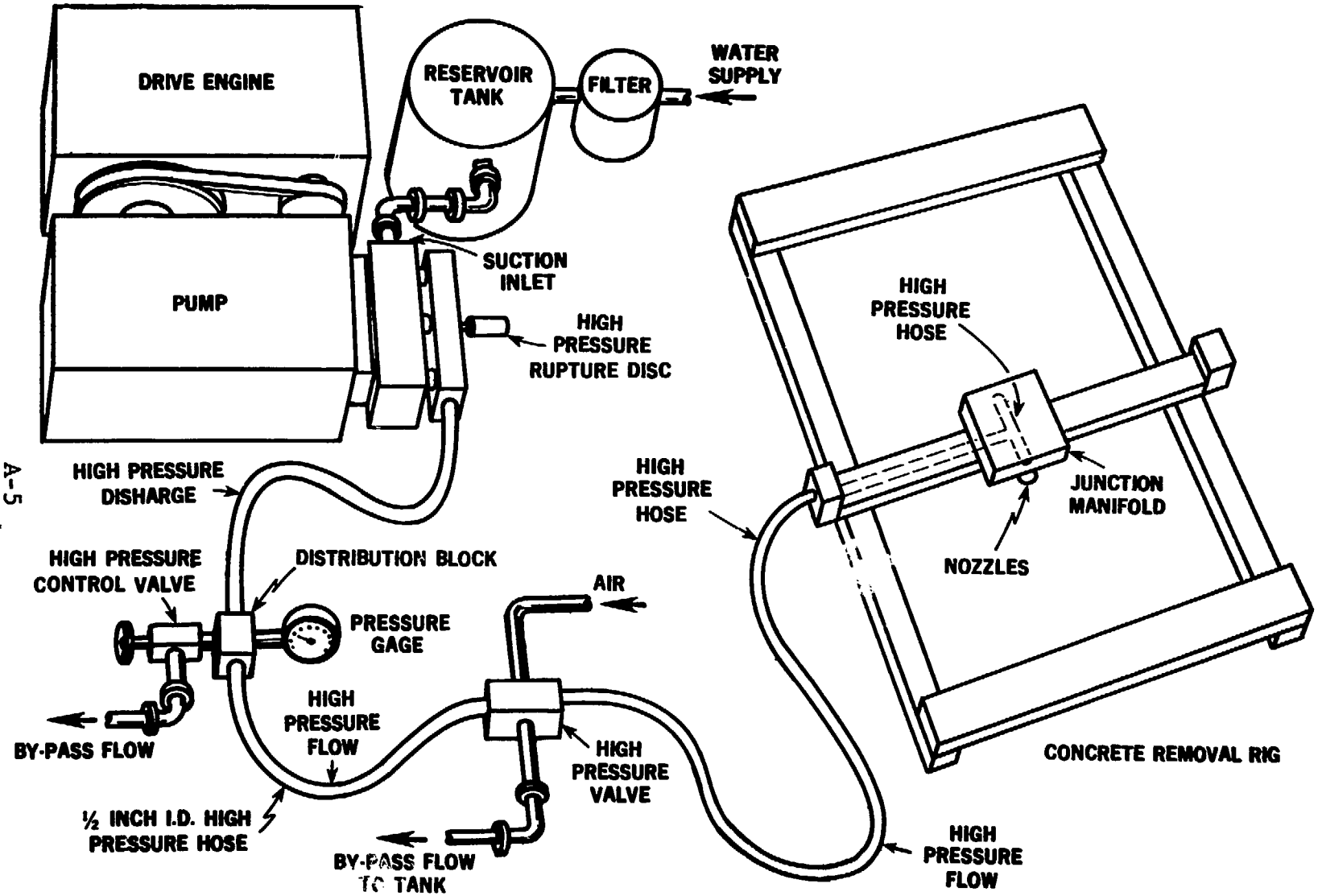

FIGURE A-3 HIGH PRESSURE WATER SYSTEM FOR CONCRETE REMOVAL

The three valves, Double-A and the Sperry Vickers, are actuated by a 12-volt DC system. The electrical wiring diagram is represented in FIGURE A-2. This system derives its power from the Ford truck's ignition system. The cable from the engine passes through a fuse box located under the cab and runs to a terminal box located at the junction station at the rear of the truck. From the terminal box power is supplied to the control station by the use of a four conductor cable. At the control station, power is run to a terminal strip then dispersed to the valves and switches. The four position toggle switch which controls the movement of the long and short axis is connected to the two Double-A valves. The power from the switches passes through normally closed limit switches on the concrete removal rig. These switches are actuated when maximum travel is reached causing the valves to de-energize. A two-position start/stop switch is used to energize the Sperry Vickers valve controlling nozzle rotation. The third switch located on the control station ties into the high pressure water system. The high pressure valve is located in the high pressure pump outlet line and is used to divert water from the nozzles on the rig to a nozzle of equivalent area or larger located on the valve outlet. The water that passes through this nozzle is recirculated into the storage tank. The valve is actuated by air from the brake line. The air is controlled by a 12-volt 3-way solenoid valve.

When the high pressure valve is energized, water from the pump is supplied to the high pressure manifold located on the nozzle carriage. From the manifold, it is directed to the two rotary seals and nozzles. The nozzle manifolds are designed in such a way as to allow the operation of from one to four nozzles efficiently. FIGURE A-3 is a graphic representation of the high pressure water system.

1.4 Concrete Scarfing Module

The module (FIGURES A-3 and A-4) consists of a rectangular frame constructed of I-beam. Along the long axis, two ball

AVAILABLE

BEST DOCUMENT AVAILABLE

59

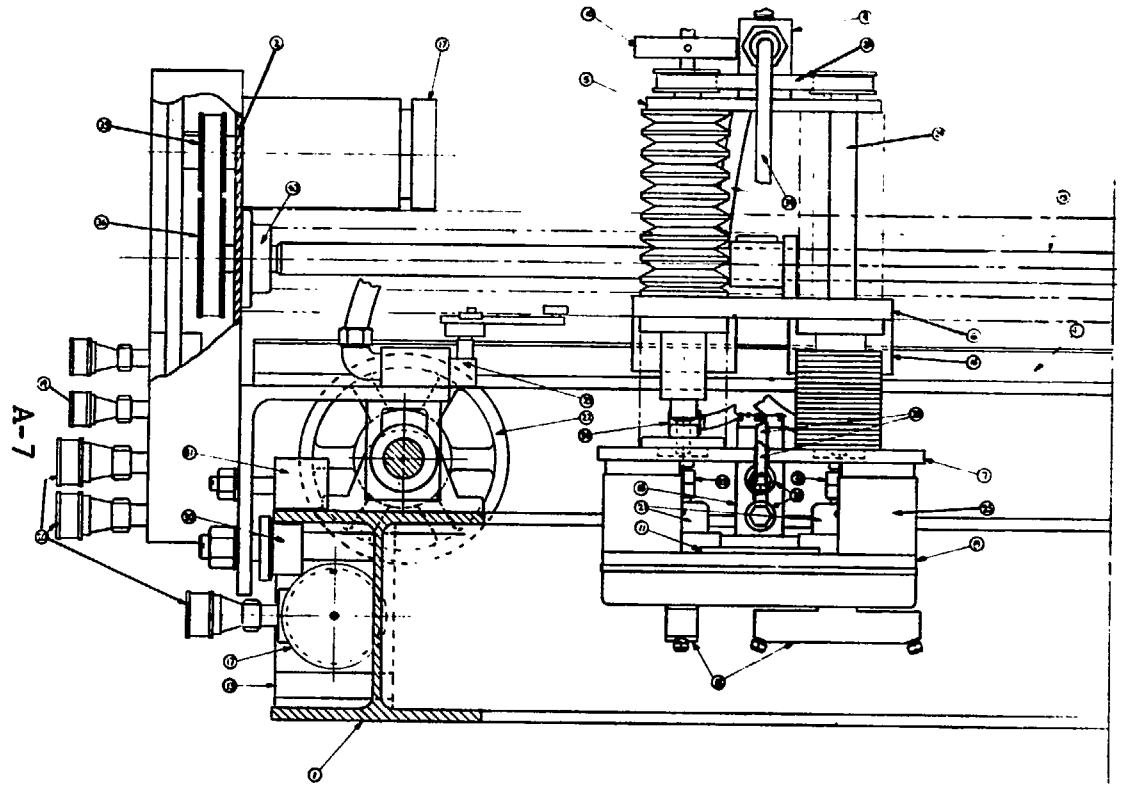

REF. DESIG.	QTY REQD	NOMENCLATURE OR DESCRIPTION	CODE NO. MFR	PART OR IDENTIFYING NO.	SPECIFICATION	ITEM NO.
	2	NOZZLE CHAIN SPROCKETS		B 240 5/8"BORE	MORSE	42
	1	TMC SLIDE TRACK		N5440 BA	TMR	41
	2	"Y" SCREW BEARINGS		GFFDR	FAFNIR	40
	3	H.P. WATER HOSES		400B3T	ROGAN & SHANLY	39
	2	HYDRAULIC HOSES		3801 7FT	SIMPLEX	38
	1	"X" MOTOR PULLEY		AK30H	BROWNING	37
	1	"Y" SCREW DRIVE PULLEY		AK61H	BROWNING	36
	1	"Y" MOTOR PULLEY		AK30H	BROWNING	35
	2	H.P. STREET ELBOW		4SE	CAJON	34
	2	H.P. REDUCERS		6HCC6	CAJON	33
	3	SWIVEL JOINTS		BD 500-061	BARCO	32
	4	NEOPRENE ROLLER		CR-3029-3	STILSON	31
	4	FLANGE ROLLER		FLR-3	OSBORN	30
	1	CRANK HANDLE		6088-K13	MC MASTER-CARR	29
	1	HEIGHT ADJUST. BELT		45DL005	WOODS	28
	1	HEIGHT ADJUST IDLER		MIB03F	BROWNING	27
	4	HEIGHT ADJUST. PULLEY		21 L005	WOODS	26
	4	VIBRATION MOUNTS		1023-3HBC	SDP	25
	4	HIGHT ADJUSTMENT SCREW		R009A	WARNER ELEC.	24
	6	LIMIT SWITCHES		1L51	HONEYWELL	23
	1	"X" SCREW DRIVE PULLEY		AK81H	BROWNING	22
	2	ROTARY SEALS		430200-001	PARTECH	21
	4	QUICK CONNECT		4HK-B9-K26	HANSON	20
	2	QUICK CONNECT		3HK-B3 K21	HANSON	19
	1	HYDRAULIC MOTOR (NOZZLE)		100 SERIES	LAMINA	18
	2	HYDRAULIC MOTORS (X&Y)		107-1007	CHAR-LYNN	17
	2	TMC SLIDE BEARINGS		SR4D	TMR	16
	1	BALL SCREW (4FT)		R1105-S4-FDCBW	WARNER ELEC	15
	2	BALL SCREWS (8FT)		R1502-108-FDCBW	WARNER ELEC	14
	1	"X" MOTOR MOUNT		C 11204		13
	2	NOZZLE MANIFOLD		C 11211		12
	1	NOZZLE MOTOR MOUNT		C 11210		11
	1	LOCKING COG		C 11209		10
	1	JUNTION BLOCK		C 11208		9
	1	LOWER NOZZLE SUPORT PLATE		C 11207B		8
	1	UPPER NOZZLE SUPORT PLATE		C 11207A		7
	1	LOWER SCREW PLATE		C 11206		6
	1	BALL SCREW RETAINER PLATE		C 11205		5
	1	IDLER PULLEY MOUNT		C 11203		4
	1	BRIDGE MOUNT		C 11202		3
	1	"Y" MOTOR & BRG. MOUNT		C 11201		2
	1	TRANSLATION CARRIAGE		B 11200		1

PARTS LIST

FIGURE A-4 CONCRETE REMOVAL UNIT, MAIN ASSEMBLY

screws are positioned. One is driven by a Char-lynn hydraulic motor and the other is driven by a timing belt connected to the motor driven screw. The ball nuts for these screws are attached to the short axis carriage. The rotation of the screws causes the nuts to advance. The short axis movement is also controlled by a ball screw. This ball screw is also driven by a Char-lynn hydraulic motor. Speed of these screws is controlled by the flow channel valves located in the control station. The nozzle rotation is produced by a Lamina hydraulic motor located on the nozzle mounting plate. The speed of rotation is controlled by the use of a flow control valve located in the control station. The nozzles must be observed at all times due to large pieces of concrete breaking loose and jamming nozzle rotation. The two rotary heads are driven by chain and sprockets. FIGURE A-4 represents the main assembly of the concrete removal rig.

Also included is a Recommended Spare Parts List (TABLE I), and a Maintenance Table (TABLE II).

BEST DOCUMENT AVAILABLE

TABLE I

RECOMMENDED SPARE PARTS LIST

PART	DESCRIPTION	VENDOR
Pump Rebuild Kit	gaskets, springs, valve assemblies, packing	Heavy Duty Hydro Blasting West Palm Beach, Florida
Filter Elements	IS-S	Filter Products Corporation Baltimore, Maryland
Rotary Seal	434200-001	Partek Houston, Texas
Hp Seal for Rotary Seal	2242 100	Partek Houston, Texas
Hp Control Valve	20A - 12 Hfq	HIP Erie, Pennsylvania
Rupture Disk	15,000 burst pressure	HIP Erie, Pennsylvania

BEST DOCUMENT AVAILABLE

AVAILABLE

TABLE II MAINTENANCE TABLE

COMPONENT	MAINTENANCE CHECK FOR:	SPECIFIC SERVICE	TIME INTERVAL
INLET WALTER FILTER	LOW SUPPLY PRESSURE TO HP PUMP	REPLACE FILTER ELEMENTS	40 HRS OR AS REQUIRED
HYDRAULIC SYSTEM	HIGH RETURN LINE 40 PSI (+) PRESSURE LOCATED ON FILTER	CHANGE FILTER	100 HRS OR REPLACE AS REQUIRED
RUPTURE DISC	LEAKAGE	REPLACE	50 HRS OR AS REQUIRED
BALL SCREWS	RUST OR DEBRIS	CHECK & OIL	40 HRS
NOZZLES	PRESSURE DROP DUE TO ERODED OVERSIZE ORIFICE	REPLACE	40 HRS OR AS REQUIRED
NOZZLE ROTATIONAL DRIVE SYSTEM	NO ROTATION OR SLIPPAGE	TIGHTEN SET SCREWS CLEAN & REPLACE SHIELD	40 HRS OR AS REQUIRED
LIMIT SWITCHS	SYSTEM DOESN'T DEENERGIZE AT MAX TRAVEL	CHECK FOR PROPER ACTUATION AND CLEAN	40 HRS
HOSES	LEAKAGE OR DIRTY END CONNECTION	CLEAN OR REPLACE	8 HRS
BEARINGS & PILLOW BLOCKS	[illegible]T AND LUBRICATION	CLEAN & LUBRICATE	20 HRS
HIGH PRESSURE PUMP PULSES OR LOSS OF PRESSURE	REFER TO PUMP MAINTENANCE MANUAL CHECK SYSTEM FOR WATER LEAKS		
LOSS OF HYDRAULIC PRESSURE	BALL VALVE MUST BE OPENED CLOGGED SUCTION STRAINER LOW HYDRAULIC FLUID	OPEN VALVE CLEAN SUCTION STRAINER ADD HYDRAULIC FLUID	AS REQUIRED

2.0 SET-UP OF EQUIPMENT

1. Concrete removal rig should be positioned in such a way that the area to be removed is centered within the rig's travel.
2. When setting nozzle standoff, care must be taken. Make sure that the nozzles will safely clear the surface of the area to be removed.
3. The control station must be placed in such a way as to allow free movement of the hoses. The operator must also have a clear view of the cutting head.
4. When connecting hydraulic hoses to the rig, care must be taken in keeping connections clean.
5. Hose connections are marked to insure proper placement of the hoses.
6. The electric cable must be connected to the rig and the control station.
7. The placement of the power module should be as close as possible but should not interfere with operation of unit. Fifty feet of hose is provided for connecting of the hydraulic supply from the power module to the control station.
8. The electric power supply line must be connected between the power module and the control station.
9. Connect supply water to high pressure pump.
10. Connect high pressure hose between high pressure valve located on truck and junction manifold located on the rig.

BEST DOCUMENT AVAILABLE

3.0 START-UP OF EQUIPMENT

1. The truck engine must be warmed up and air pressure must exceed 60 psi (4.14 BAR).
2. Check to make sure emergency brake is engaged.
3. Put bypass valve on control station in tank mode.
4. Engage power take-off (instructions are located in cab).
5. Let fluid warm up for 5 to 10 minutes.
6. Start diesel engine on high pressure pump and let it warm up.
7. Engage nozzle pressure switch in start position. This allows seals to be lubricated.
8. Switch bypass valve on control station to rig mode and engage nozzle rotation switch.
9. Engage long and short axis switch. Check advance and nozzle rotational speed.
10. Move cutting head to area of first cut.

BEST DOCUMENT AVAILABLE

4.0 REMOVAL OF CONCRETE

1. Operator must wear safety visor, rain suit and gloves. This will give maximum protection from flying debris.
2. Pump operator must make sure control valve on pump is open and pump is unloaded.
3. Control station operator engages nozzle pressure switch.
4. Pump operator engages high pressure pump and increases engine speed up to 2,000 rpm.
5. Pump operator closes down control valve until working pressure is reached.
6. Nozzle rotation is engaged. Optimum rpm is 80.
7. It is recommended that removal is done in the long axis mode. This gives maximum width.
8. Care must be taken and operator must observe the function of all components of the unit while concrete is being removed.

BEST DOCUMENT AVAILABLE